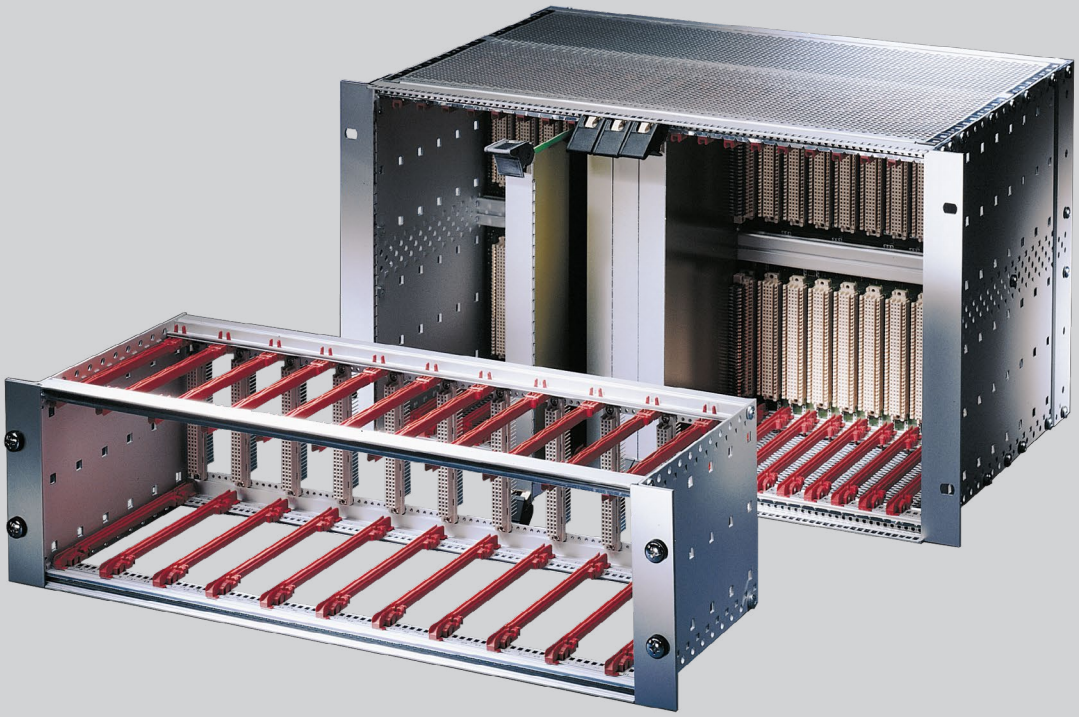

CONNECT AND PROTECT

EuropacPRO

nVent SCHROFF

Subracks – EuropacPRO

OVERVIEW

MAIN KATALOG

Cabinets 1

Wall mounted cases 2

Accessories for cabinets and wall mounted cases . . 3

Climate control . . 4

Electronics cases 5

Subracks/ 19" chassis 6

Front panels, plug-in units 7

Systems 8

Power supply units 9

Backplanes 10

Connectors, front panel component system 11

Appendix 12

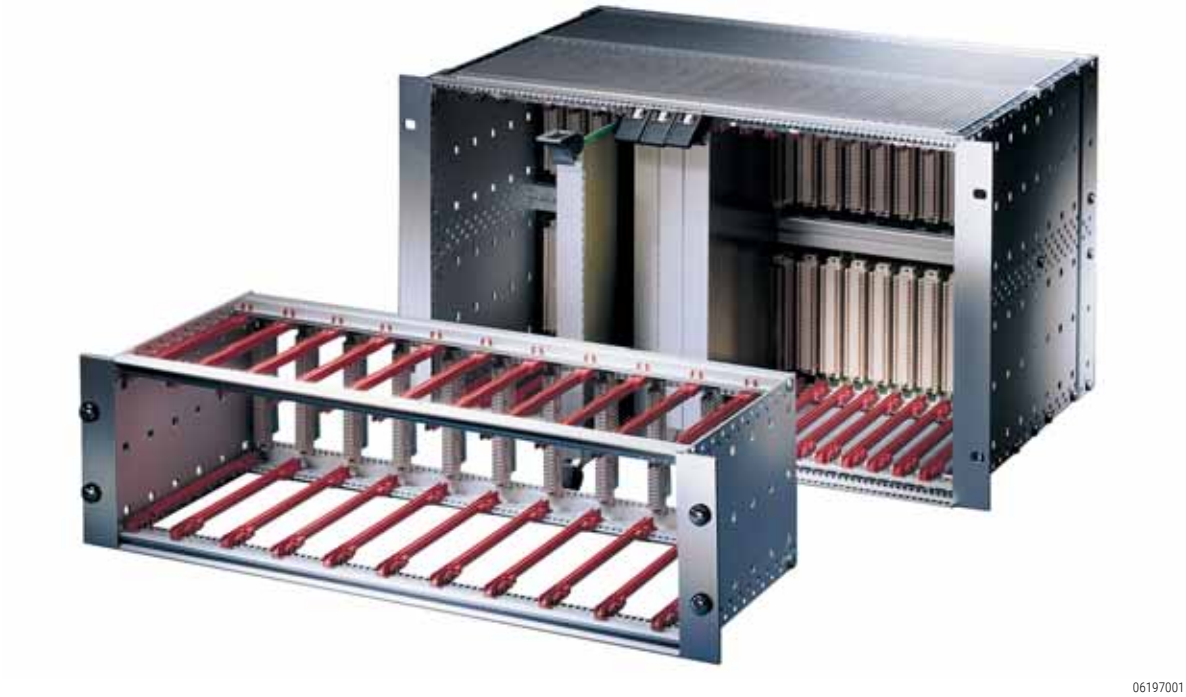

06197001

06112014

Different horizontal rails for various applications

04602002

The IEEE handles and shielded front panels are designed for the construction of CompactPCI and VME64x subrack systems

06

Sequential numbering on horizontal rails (> 28 HP) and markings on the guide rails provide quick optical positioning aids. ESD clips can be used at front or rear, to protect electronics from electrostatic discharge

STANDARDS/CERTIFICATIONS

- Inner and outer dimensions meet:
  IEC 60297-3-100, -101, - 102, -103, -104, -105
  IEEE 1101.1 and IEEE 1101.10/11
- Type of protection IP 20 to IEC 60529
- EMC testing to IEC 61587-3
- Shock and vibration test reports:
  German "Bahn" standards BN 411002, BN 411003;
  NF F 60002, NF F 67012
  IEC 61587-2, EN 50155
- Nuclear plants KTA 1401

EMC CURVE

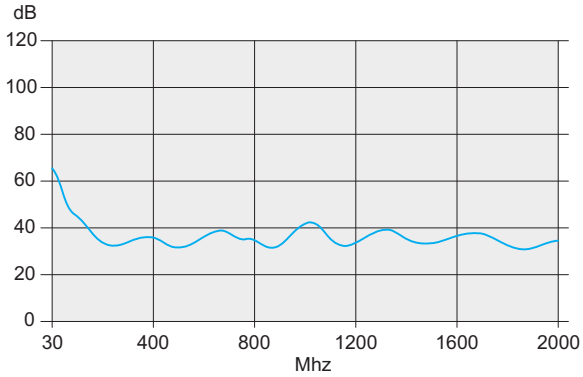

06108081

Subracks – EuropacPRO

OVERVIEW

19" SUBRACKS

- **Kits or individual configuration**
- **One product and accessories platform for every kind of customer requirement and application**
- **Suitable for CompactPCI and VME64x insertion and extractor handles**
- **EMC shielding can easily be retrofitted if needed**
- **Shock and vibration resistant up to 5 g**
- **3D PDF or CAD 3D data available for download**

06102008

KITS

- All required parts available under one order number, some pre-fitted
- Most popular dimensions and versions available from stock
- For installed loads up to 7.5 kg, up to 11 kg and up to 15 kg
- As unshielded or shielded version
- Supplied as space-saving flat-pack

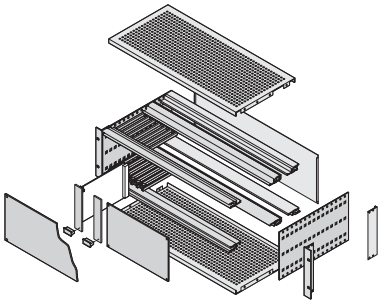

06105058

SERVICEPLUS INDIVIDUAL CONFIGURATION

- Single parts may individually be configured, respectively assembled on request (from quantity 1)
- Very wide range of variants in heigth, width and depth
- Guide rails for different applications
- EMC shielding material to improve EMC performance
- Interior assembly options with mounting plate or combined mounting (3 + 6 U segments)
- Other accessories and assembly kits

SERVICEPLUS

e.g. individual configuration and assembly
e.g. modification (cut-outs)
e.g. downloads (CAD drawings, user manuals, test reports)
e.g. custom solutions

Overview 6.6

Introduction. . . . 6.4

Kits
Light 6.8
Flexible 6.9
Heavy 6.14
CompactPCI. 6.16

ServicePLUS configuration
Side panels 6.21
Horizontal rails, threaded inserts, perforated strips . 6.29
Guide rails 6.37
Cover plates 6.44
EMC shielding . . . 6.54
Interior assemblies. 6.59
Assembly kits 6.65

Application examples 6.71

Subracks for mobile railway applications 6.70

europacPRO for industrial applications 6.86

europacPRO for rugged applications 6.92

Subracks – EuropacPRO

KIT, "LIGHT", UNSHIELDED, FOR BACKPLANE MOUNTING

06111002

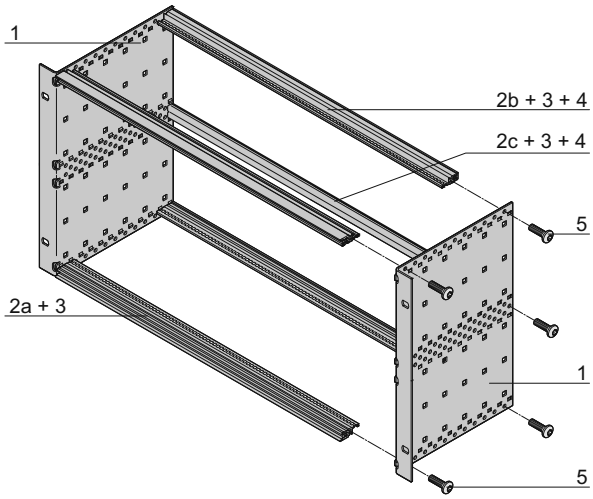

06111056

6 U

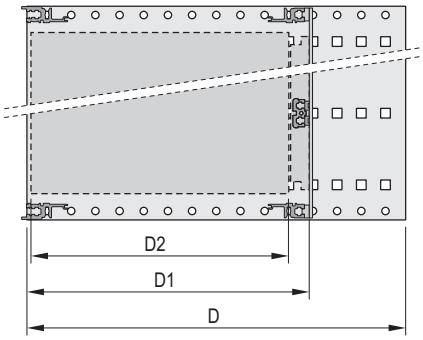

06108051

D = overall depth, D1 = insertion depth,
D2 = board depth = D1 - 15 mm

04400001

Rear horizontal rail for backplane mounting with insulation strip

- Subrack with side panel type L ("light") with firmly fixed 19" brackets
- Rear horizontal rails for backplane mounting with insulation strip
- Installed load up to 7.5 kg
- Cost-optimised

DELIVERY COMPRISES (Kit)

Item	Qty 3 U	Qty 6 U	Description
1	2	2	Side panel type L, Al, 2 mm, passivated, with built-in 19" support bracket
2a	2	2	Front horizontal rail (L-KD)
2b	2	2	Rear horizontal rail (L-ST)
2c	-	1	Rear horizontal rail centre (ST)
3	4	6	Threaded insert, front and rear (pre-fitted)
4	2	4	Insulation strip (pre-fitted)
5	1	1	Fixing material kit, user manual

ORDER INFORMATION

Height U	Width HP	Depth D mm	Depth D1 mm	Part no.
3	84	175	175	**24564-131**
3	84	235	175/235	**24564-132**
3	84	295	175/235/295	**24564-133**
6	84	175	175	**24564-431**
6	84	235	175/235	**24564-432**
6	84	295	175/235/295	**24564-433**

Accessories

19" assembly kit (screw, washer, nut) (8 × screws, 8 × plastic washers, 8 × cage nuts)	**21100-435**

Guide rails (standard), ESD clips

Depth D2 mm	Qty/PU piece	Part no.
160	10	**24560-351**
220	10	**24560-353**
280	10	**24560-379**
ESD clips for guide rails PU 50 pieces		**24560-255**

Cover plates for insertion in horizontal rails (type L)

Depth D2 mm	Width HP	Qty/PU piece	Part no.
160	84	2	**24561-051**
220	84	2	**24561-052**

NOTE

- Subrack is not prepared for shielding

Subracks – EuropacPRO

KIT, "FLEXIBLE", UNSHIELDED, FOR CONNECTOR MOUNTING

06105001

Photo: 3 U subrack

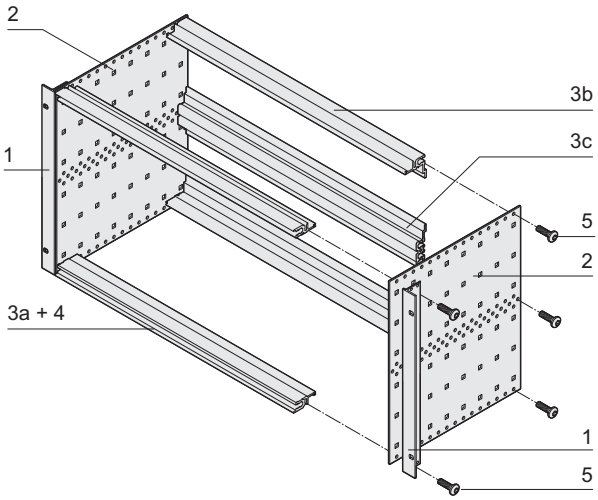

06105054

6 U

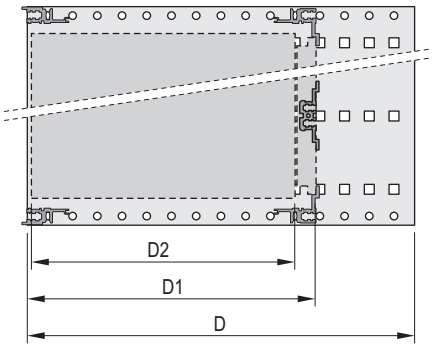

06108050

D = overall depth, D1 = insertion depth,
D2 = board depth = D1 - 15 mm

04400003

Horizontal rail to rear for connector mounting

- Subrack with side panel type F ("flexible"), 19" bracket is depth-adjustable
- Rear horizontal rails for connector mounting (IEC 60603-2 / DIN 41612)
- Installed load up to 11 kg

DELIVERY COMPRISES (kit)

Item	Qty 3 U	Qty 6 U	Description
1	2	2	19" support bracket, Al extrusion, for EMC gasket (St, stainless)
2	2	2	Side panel type F, Al, 2 mm
3a	2	2	Front horizontal rail (L-KD)
3b	2	2	Rear horizontal rail (L-MZ) for connector mounting
3c	-	1	Centre horizontal rail (MZ)
4	2	2	Threaded insert to front (pre-fitted)
5	1	1	Fixing material kit, user manual

ORDER INFORMATION

Height U	Width HP	Depth D mm	Depth D1 mm	Part no.
3	84	175	175	**24563-191**
3	84	235	175/235	**24563-192**
3	84	295	175/235/295	**24563-193**
3	84	355	175/235/295/355	**24563-194**
6	84	175	175	**24563-491**
6	84	235	175/235	**24563-492**
6	84	295	175/235/295	**24563-493**
6	84	355	175/235/295/340	**24563-494**

Accessories

19" assembly kit (screw, washer, nut) (8 × screws, 8 × plastic washers, 8 × cage nuts)	**21100-435**

Guide rails (standard), ESD clips

Depth D2 mm	Qty/PU piece	Part no.
160	10	**24560-351**
220	10	**24560-353**
280	10	**24560-379**
340	10	**24560-380**
ESD clip for guide rails PU 50 pieces		**24560-255**

Cover plates for insertion in horizontal rails (type L)

Depth D2 mm	Width HP	Qty/PU piece	Part no.
160	84	2	**24561-051**
220	84	2	**24561-052**

Part number in bold face type: ready for despatch within 2 working days
Part number in normal type: ready for despatch within 10 working days

Subracks – EuropacPRO

SUBRACK KIT, UNSHIELDED FOR CONNECTOR, ASSEMBLY ON SLIDE RAIL

06105001

Photo: 3 U subrack

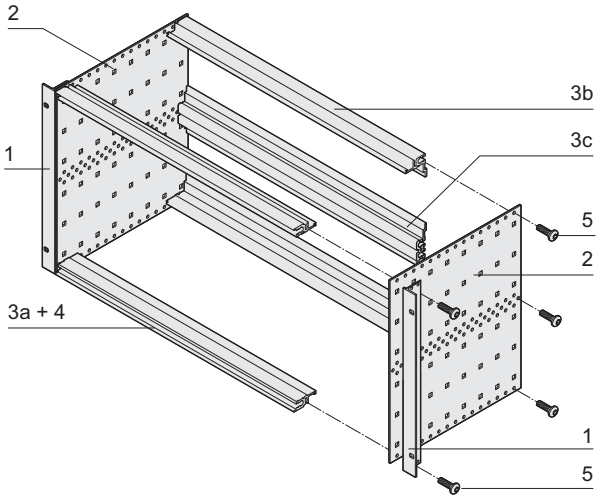

06105054

6 U

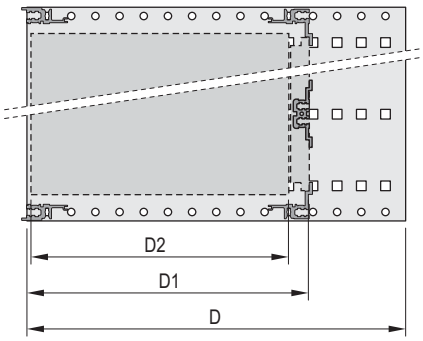

06108050

D=overall depth, D1=insertion depth,
D2=board depth = D1 - 15 mm

04400003

Rear horizontal rail for connector mounting

- Subrack can be used with slide rails
- Subrack with side panel type F ("flexible"), 19" bracket with notch for slide rail assembly
- Horizontal rails, rear, for connector mounting (IEC 60603-2 / DIN 41612)
- Installed load up to 11 kg

DELIVERY INCLUDES (Kit, flat pack)

Item	Qty 3 U	Qty 6 U	Description
1	2	2	19" support bracket, Al extrusion, for EMC sealing (St, stainless)
2	2	2	Side panel type F, Al, 2 mm
3a	2	2	Front horizontal rail (L-KD)
3b	2	2	Rear horizontal rail (L-MZ) for connector mounting
3c	-	1	Center horizontal rail (MZ)
4	2	2	Threaded insert to front (pre-fitted)
5	1	1	Fixing materials kit, user manual

ORDER INFORMATION

Height U	Width HP	Depth D mm	Depth D1 mm	Part no.
3	84	235	175/235	24553-192
3	84	295	175/235/295	24553-193
3	84	355	175/235/295/355	24553-194
6	84	235	175/235	24553-492
6	84	295	175/235/295	24553-493
6	84	355	175/235/295/355	24553-494

Accessories

19" fixing material kit (screw, washer, nut) (8 × screws, 8 × plastic washers, 8 × cage nuts)	**21100-435**

Guide rails (standard), ESD clips

Depth D2 mm	Qty/PU piece	Part no.
160	10	**24560-351**
220	10	**24560-353**
280	10	**24560-379**
ESD clip for guide rails Spring steel, tin-plated, silver, PU 50 pieces		**24560-255**

Cover plates for insertion into horizontal rail type L

Depth D2 mm	Width HP	Qty/PU piece	Part no.
160	84	2	**24561-051**
220	84	2	**24561-052**

NOTE

- Alternative product for older europac lab and europacRational subrack series

Subracks – EuropacPRO

SUBRACK KIT, UNSHIELDED, FLEXIBLE FOR BACKPLANE, ASSEMBLY ON SLIDE RAIL

06102007

Photo: 3 U subrack

6 U

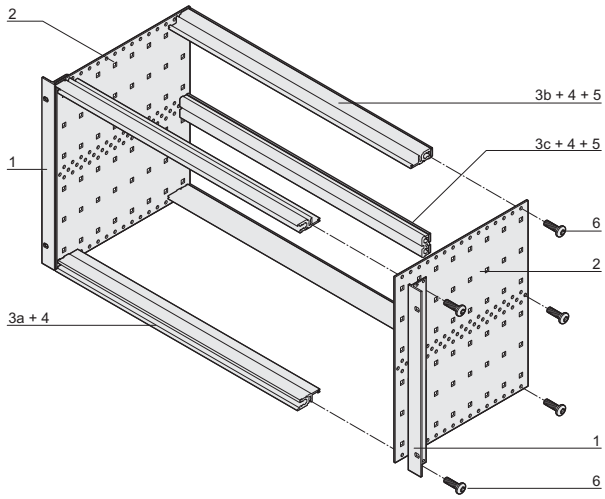

06102081

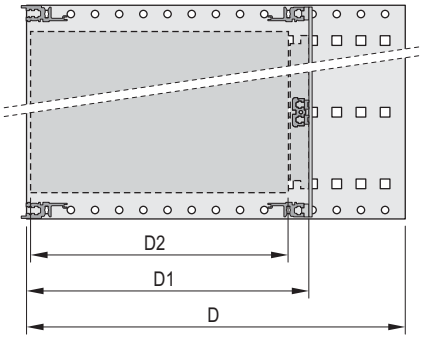

06108051

D=overall depth, D1=insertion depth,
D2=board depth = D1 - 15 mm

04400001

Rear horizontal rail for backplane mounting with insulation strip

- Subrack can be used with slide rails
- Subrack with side panel type F ("flexible"), 19" bracket is depth-adjustable
- Rear horizontal rails for backplane mounting with insulation strip
- Installed load up to 11 kg

DELIVERY INCLUDES (Kit, flat pack)

Item	Qty 3 U	Qty 6 U	Description
1	2	2	19" support bracket, Al extrusion, for EMC sealing (St, stainless)
2	2	2	Side panel type F, Al, 2 mm
3a	2	2	Front horizontal rail (L-KD)
3b	2	2	Rear horizontal rail (L-ST) for backplane mounting
3c	-	1	Rear center horizontal rail (ST)
4	4	6	Threaded inserts, front and rear (pre-fitted)
5	2	4	Insulation strip (pre-fitted)
6	1	1	Fixing materials kit, user manual

ORDER INFORMATION

Height U	Width HP	Depth D mm	Depth D1 mm	Part no.
3	84	235	175/235	24553-132
3	84	295	175/235/295	24553-133
3	84	355	175/235/295/355	24553-134
6	84	235	175/235	24553-432
6	84	295	175/235/295	24553-433
6	84	355	175/235/295/355	24553-434

Accessories

19" fixing material kit (screw, washer, nut) (8 × screws, 8 × plastic washers, 8 × cage nuts)	**21100-435**

Guide rails (standard), ESD clips

Depth D2 mm	Qty/PU piece	Part no.
160	10	**24560-351**
220	10	**24560-353**
280	10	**24560-379**
340	10	**24560-380**
ESD clip for guide rails Spring steel, tin-plated, silver, PU 50 pieces		**24560-255**

Cover plates for insertion into horizontal rail type L

Depth D2 mm	Width HP	Qty/PU piece	Part no.
160	84	2	**24561-051**
220	84	2	**24561-052**

NOTE

- Alternative product for older europac lab and europacRational subrack series

Subracks – EuropacPRO

KIT, "FLEXIBLE", UNSHIELDED, FOR BACKPLANE MOUNTING

06102007

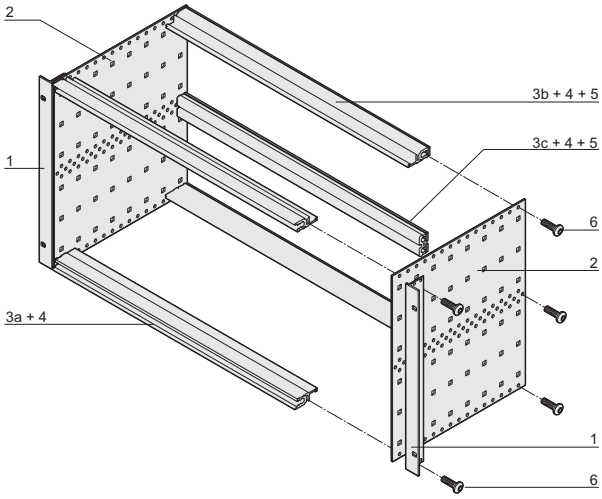

06102081

6 U

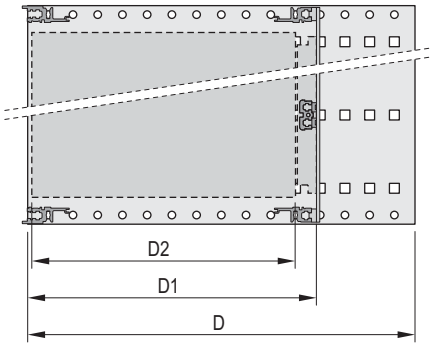

06108051

D = overall depth, D1 = insertion depth,
D2 = board depth = D1 - 15 mm

04400001

Rear horizontal rail for backplane mounting with insulation strip

- Subrack with side panel type F ("flexible"), 19" bracket is depth-adjustable
- Rear horizontal rail for backplane mounting with insulation strip
- Installed load up to 11 kg

DELIVERY COMPRISES (kit)

Item	Qty 3 U	Qty 6 U	Description
1	2	2	19" support bracket, Al extrusion, for EMC stainless steel gasket
2	2	2	Side panel type F, Al, 2 mm
3a	2	2	Front horizontal rail (L-KD)
3b	2	2	Rear horizontal rail (L-ST) for backplane mounting
3c	-	1	Rear horizontal rail centre (ST)
4	4	6	Threaded insert, front and rear (pre-fitted)
5	2	4	Insulation strip (pre-fitted)
6	1	1	Fixing material kit, user manual

ORDER INFORMATION

Height U	Width HP	Depth D mm	Depth D1 mm	Part no.
3	84	175	175	**24563-131**
3	84	235	175/235	**24563-132**
3	84	295	175/235/295	**24563-133**
3	84	355	175/235/295/355	**24563-134**
3	84	415	175/235/295/355	**24563-135**
3	84	475	175/235/295/355	**24563-136**
6	84	175	175	**24563-431**
6	84	235	175/235	**24563-432**
6	84	295	175/235/295	**24563-433**
6	84	355	175/235/295/355	**24563-434**
6	84	415	175/235/295/355	**24563-435**
6	84	475	175/235/295/355	**24563-436**

Accessories

19" assembly kit (screw, washer, nut) (8 × screws, 8 × plastic washers, 8 × cage nuts)	**21100-435**

Guide rails (standard), ESD clips

Depth D2 mm	Qty/PU piece	Part no.
160	10	**24560-351**
220	10	**24560-353**
280	10	**24560-379**
340	10	**24560-380**
ESD clip for guide rails PU 50 pieces		**24560-255**

Cover plates for insertion in horizontal rails (type L)

Depth D2 mm	Width HP	Qty/PU piece	Part no.
160	84	2	**24561-051**
220	84	2	**24561-052**

Subracks – EuropacPRO

KIT, "FLEXIBLE", SHIELDED, FOR BACKPLANE MOUNTING

06102008

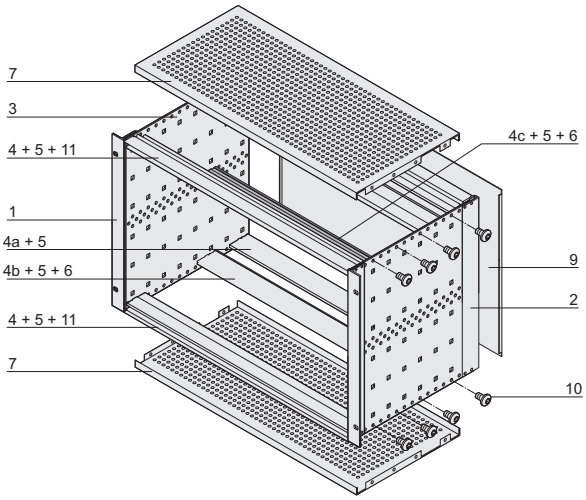

6 U

06102075

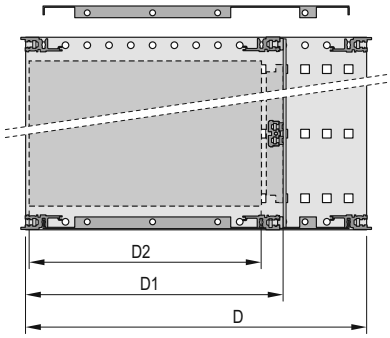

06113056

D = overall depth, D1 = insertion depth,
D2 = board depth = D1 - 15 mm

04400001

Rear horizontal rail for backplane mounting with insulation strip

- Subrack with side panel type F ("flexible"), 19" bracket is depth-adjustable
- Rear horizontal rail for backplane mounting with insulation strip
- Shielding typically 40 dB at 1 GHz, 30 dB at 2 GHz, assuming that the front is closed with shielded front panels
- Installed load up to 11 kg

DELIVERY COMPRISES ((kit))

Item	Qty 3 U	6 U	Description
1	2	2	19" support bracket for **EMC textile gasket**
2	2	2	Rear corner profile for **EMC textile gasket**
3	2	2	Side panel type F
4	2	2	Front horizontal rail (L-KD)
4 a	2	2	Rear horizontal rail (L-KD)
4 b	2	2	Rear horizontal rail (L-ST) for backplane mounting with insulation strip
4 c	-	1	Centre horizontal rail (ST)
5	6	8	Threaded insert (pre-fitted)
6	2	4	Insulation strip, fixed
7	2	2	EMC cover plate
8	1	1	EMC gasketing material (pre-fitted)
9	1	1	Rear panel
10	1	1	Fixing material kit
11	2	2	Perforated strip (pre-fitted)
12	1	1	User manual

ORDER INFORMATION

Height U	Width HP	Depth D mm	Depth D1 mm	Part no.
3	84	235	175/235	**24563-142**
3	84	295	175/235/295	**24563-143**
3	84	355	175/235/295	**24563-144**
3	84	415	175/235/295	**24563-145**
3	84	475	175/235/295	**24563-146**
6	84	235	175/235	**24563-442**
6	84	295	175/235/295	**24563-443**
6	84	355	175/235/295	**24563-444**
6	84	415	175/235/295	**24563-445**
6	84	475	175/235/295	**24563-446**

Accessories

19" assembly kit (screw, washer, nut) (8 × screws, 8 × plastic washers, 8 × cage nuts)	**21100-435**

Guide rails (standard), ESD clips

Depth D2 mm	Qty/PU piece	Part no.
160	10	**24560-351**
220	10	**24560-353**
280	10	**24560-379**
340	10	**24560-380**
ESD clip for guide rails PU 50 pieces		**24560-255**

Part number in bold face type: ready for shipping within 2 working days
Part number in normal type: ready for shipping within 10 working days

Subracks – EuropacPRO

KIT, 'HEAVY', UNSHIELDED, FOR BACKPLANE MOUNTING

06102007 06111003

Without front handle — With front handle

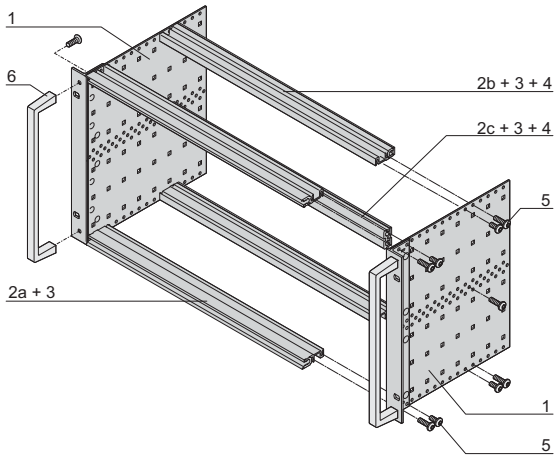

6 U

06111057

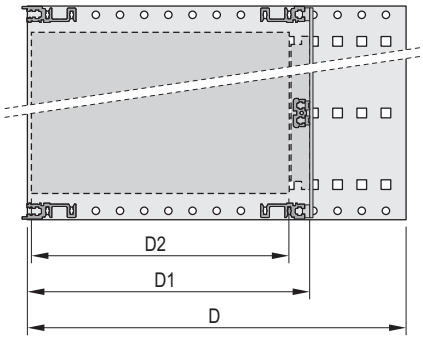

06108052

D = overall depth, D1 = insertion depth, D2 = board depth

04400001

Rear horizontal rail for backplane mounting with insulation strip

- Subrack with side panel type H ("heavy"), 19" bracket is firmly fixed to side panel (tox-cold welded)
- Rear horizontal rail for backplane mounting with insulation strip
- Shock and vibration resistance up to 5 g
- Installed load up to 15 kg
- Versions with/without front handles

DELIVERY COMPRISES (Kit)

Item	Qty 3 U	Qty 6 U	Description
1	2	2	Side panel type H, Al, 2 mm, passivated, with 19" support bracket (tox-cold welded) for textile EMC gasket
2a	2	2	Front horizontal rail (H-KD)
2b	2	2	Rear horizontal rail (H-ST)
2c	-	1	Rear horizontal rail centre (H-ST)
3	4	6	Threaded insert, front and rear (pre-fitted)
4	2	4	Insulation strip (pre-fitted)
5	1	1	Fixing material kit, user manual
6	2	2	Front handle (on version with front handle only)

ORDER INFORMATION

Height U	Width HP	Depth D mm	Depth D1 mm	Part no. with front handle	Part no. without front handle
3	84	175	175	**24567-161**	**24563-161**
3	84	235	175/235	**24567-162**	**24563-162**
3	84	295	175/235/295	**24567-163**	**24563-163**
3	84	355	175/235/295/355	**24567-164**	**24563-164**
6	84	175	175	**24567-461**	**24563-461**
6	84	235	175/235	**24567-462**	**24563-462**
6	84	295	175/235/295	**24567-463**	**24563-463**
6	84	355	175/235/295/355	**24567-464**	**24563-464**

Accessories

19" assembly kit (screw, washer, nut) (8 × screws, 8 × plastic washers, 8 × cage nuts)	**21100-435**

Guide rails (standard), ESD clips

Depth D2 mm	Qty/PU piece	Part no.
160	10	**24560-351**
220	10	**24560-353**
280	10	**24560-379**
340	10	**24560-380**
ESD clip for guide rails PU 50 pieces		**24560-255**
Torx panhead screw , for extra bolting of the guide rails, 2.5 × 9.3, zinc-plated, PU 100 pieces; torque max. 0.2 Nm		**24560-141**

Cover plates for bolting to side panel

Depth D2 mm	Width HP	Qty/PU piece	Part no.
160	84	2	**24560-078**
220	84	2	**24560-079**
280	84	2	**24560-080**
340	84	2	**24560-081**

Subracks – EuropacPRO

KIT, "HEAVY", SHIELDED, FOR BACKPLANE MOUNTING

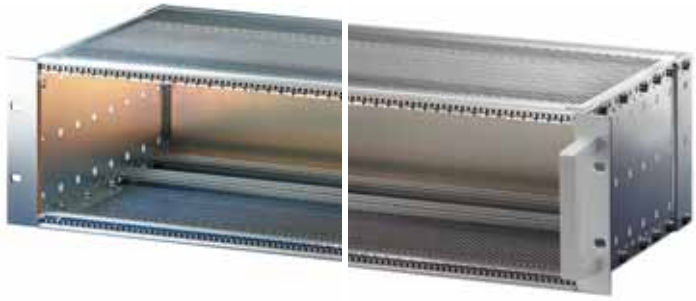

06102008 06111001

Without front handle With front handle

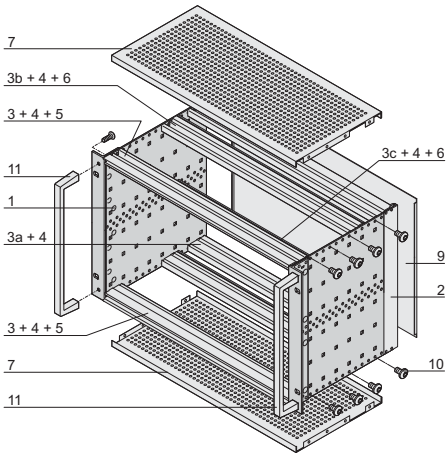

6 U

06111058

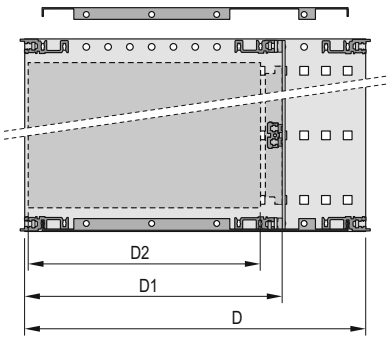

06113055

D = overall depth, D1 = insertion depth,
D2 = board depth = D1 - 15 mm

04400001

Rear horizontal rail for backplane mounting with insulation strip

- Subrack with side panel type H ("heavy"), 19" bracket is firmly fixed to side panel (tox-cold welded)
- Rear horizontal rail for backplane mounting with insulation strip
- Shielding typically 40 dB at 1 GHz, 30 dB at 2 GHz, assuming that the front is closed with sealed front panels
- Shock and vibration resistance up to 5 g
- Installed load up to 15 kg
- Versions with/without front handles

DELIVERY COMPRISES (Kit)

Item	Qty 3 U	Qty 6 U	Description
1	2	2	Side panel type H, Al, 2 mm, passivated, with 19" support bracket (tox-cold welded); for textile EMC gasket
2	2	2	Rear corner profile for textile EMC gasket
3	2	2	Front horizontal rail (H-KD)
3 a	2	2	Rear horizontal rail (H-KD)
3 b	2	2	Rear horizontal rail (H-ST)
3 c	-	1	Rear horizontal rail centre (ST)
4	6	8	Threaded insert (pre-fitted)
5	2	2	Perforated strip (pre-fitted)
6	2	4	Insulation strip (pre-fitted)
7	2	2	EMC cover plate
8	1	1	EMC gasketing material (pre-fitted)
9	1	1	EMC rear panel
10	1	1	Fixing material kit, user manual
11	2	2	Front handle (on version with front handle only)

ORDER INFORMATION

Height U	Width HP	Depth D mm	Depth D1 mm	Part no. with front handle	Part no. without front handle
3	84	235	175/235	**24567-172**	**24563-172**
3	84	295	175/235/295	**24567-173**	**24563-173**
3	84	355	175/235/295	**24567-174**	**24563-174**
6	84	235	175/235	**24567-472**	**24563-472**
6	84	295	175/235/295	**24567-473**	**24563-473**
6	84	355	175/235/295	**24567-474**	**24563-474**

Accessories

19" assembly kit (screw, washer, nut) (8 × screws, 8 × plastic washers, 8 × cage nuts)	**21100-435**

Guide rails (standard), ESD clips

Depth D2 mm	Qty/PU piece	Part no.
160	10	**24560-351**
220	10	**24560-353**
280	10	**24560-379**
ESD clip for guide rails PU 50 pieces		**24560-255**
Torx panhead screw , for extra bolting of the guide rails, 2.5 × 9.3, zinc-plated, PU 100 pieces; torque max. 0.2 Nm		**24560-141**

Part number in bold face type: ready for despatch within 2 working days
Part number in normal type: ready for despatch within 10 working days

Subracks – EuropacPRO

KIT, FOR COMPACTPCI, FOR BACKPLANE MOUNTING, WITHOUT REAR I/O, SHIELDED

06102009

6 U

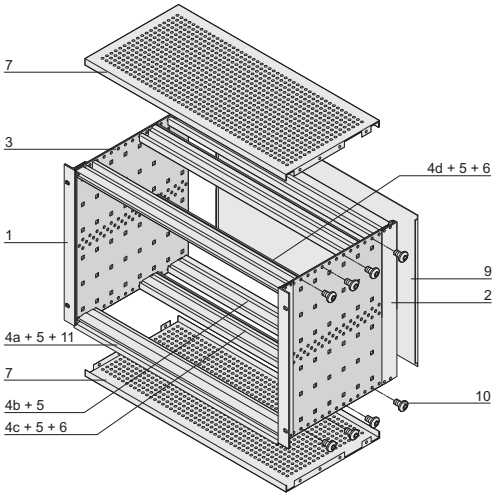

06102078

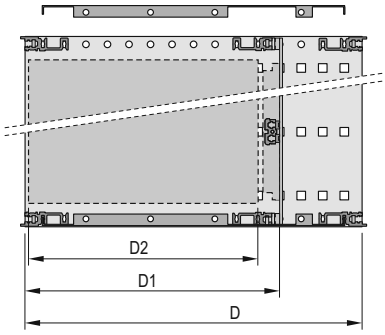

06113055

D = overall depth, D1 = insertion depth,
D2 = board depth = D1 - 15 mm

04400001

Rear horizontal rail for backplane mounting with insulation strip

- Subrack with side panel type F ("flexible") for CompactPCI plug-in units with high insertion and withdrawal forces
- Rear horizontal rail for backplane mounting with insulation strip
- Shielding typically 40 dB at 1 GHz, 30 dB at 2 GHz, assuming that the front is covered with shielded front panels
- Installed load up to 11 kg

DELIVERY COMPRISES (kit)

Item	Qty 3 U	Qty 6 U	Description
1	2	2	19" support bracket for **EMC textile gasket**
2	2	2	Rear corner profile for **EMC textile gasket**
3	2	2	Side panel type F
4	1	-	Front horizontal rail (H-KD)
4 a	1	2	Front horizontal rail IEEE (H-LD)
4 b	2	2	Rear horizontal rail (L-KD)
4 c	2	2	Rear horizontal rail (H-ST), for backplane mounting with insulation strip
4 d	-	1	Centre horizontal rail (ST)
5	6	8	Threaded insert (pre-fitted)
6	2	4	Insulation strip (pre-fitted)
7	2	2	EMC cover plate
8	1	1	EMC gasketing material (pre-fitted)
9	1	1	Rear panel
10	1	1	Fixing material kit
11	2	2	Perforated strip (pre-fitted in item 4+4a)
12	1	1	User manual

ORDER INFORMATION

Height U	Width HP	Depth D mm	Depth D1 mm	Part no.
3	84	235	175	**24563-152**
6	84	235	175	**24563-452**
Accessories				
Guide rail with coding, red 160 mm deep, PBT, UL 94 V-0, groove width 2 mm, PU 10 pieces				**24560-356**
Guide rail with coding, grey 160 mm deep, PBT, UL 94 V-0, groove width 2 mm, PU 10 pieces				**24560-358**
Guide rail with coding, green, offset 160 mm deep, PBT, UL 94 V-0, groove width 2 mm, PU 10 pieces				**24560-359**
ESD clip for guide rails PU 50 pieces				**24560-255**
ESD clip for alignment pin of CPCI/VME64x handle PU 50 pieces				**24560-256**
Torx panhead screw 2.5 × 9.3, zinc-plated, PU 100 pieces; torque max. 0.2 Nm				**24560-141**
Coding peg PC, UL 94 V-0, RAL 7035, PU 100 pieces				**20817-501**
19" assembly kit (screw, washer, nut) (8 × screws, 8 × plastic washers, 8 × cage nuts)				**21100-435**

Subracks – EuropacPRO

KIT, FOR COMPACTPCI, FOR BACKPLANE MOUNTING, FOR REAR I/O, SHIELDED

06108007

- Subrack with side panel type F ("flexible") for CompactPCI plug-in units with high insertion and withdrawal forces
- For rear I/O boards (depth 80 mm)
- Rear horizontal rail for backplane mounting with insulation strip
- Shielding typically 40 dB at 1 GHz, 30 dB at 2 GHz, assuming that the front is covered with shielded front panels
- Installed load up to 11 kg

6 U

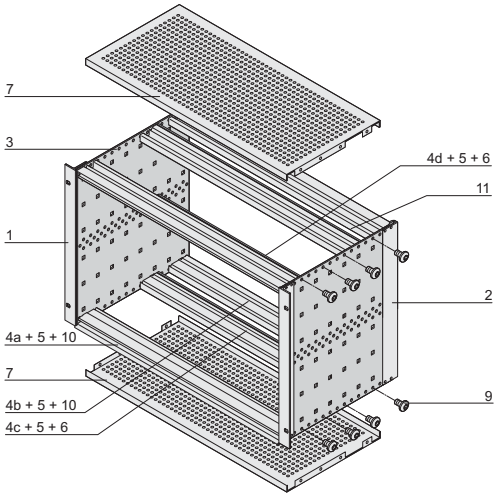

06105076

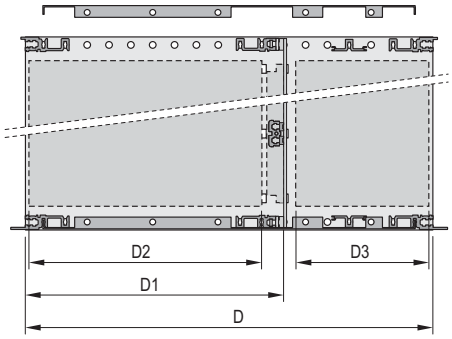

06108075

D = overall depth, D1 = insertion depth,
D2 = board depth = D1 - 15 mm, D3 = rear I/O board depth

04400001

Rear horizontal rail for backplane mounting with insulation strip

DELIVERY COMPRISES (kit)

Item	Qty 3 U	Qty 6 U	Description
1	2	2	19" support bracket for **EMC textile gasket**
2	2	2	Rear corner profile for **EMC textile gasket**
3	2	2	Side panel type F
4	1	-	Front horizontal rail (H-KD)
4 a	1	2	Front horizontal rail IEEE (H-LD)
4 b	2	2	Rear horizontal rail (H-KD)
4 c	2	2	Rear horizontal rail (H-ST), with insulation strip for backplane mounting
4 d	-	1	Centre horizontal rail (ST)
5	6	8	Threaded insert (pre-fitted)
6	2	4	Insulation strip, fixed
7	2	2	EMC cover plate
8	1	1	EMC gasketing material (pre-fitted)
9	1	1	Fixing material kit
10	2	2	Perforated strip (pre-fitted)
11	2	2	Horizontal rail type AB
12	1	1	User manual

ORDER INFORMATION

Height U	Width HP	Depth D mm	Depth D1 mm	Depth D3 mm	Part no.
3	84	275	175	80	**24563-157**
6	84	275	175	80	**24563-457**

Accessories

Guide rail with coding, red 160 mm deep, PBT, UL 94 V-0, groove width 2 mm, PU 10 pieces	**24560-356**
Guide rail with coding, grey 160 mm deep, PBT, UL 94 V-0, groove width 2 mm, PU 10 pieces	**24560-358**
Guide rail with coding, green, offset 160 mm deep, PBT, UL 94 V-0, groove width 2 mm, PU 10 pieces	**24560-359**
ESD clip for guide rails PU 50 pieces	**24560-255**
ESD clip for alignment pin of CPCI/VME64x handle PU 50 pieces	**24560-256**
Guide rail with coding, red 70 mm deep, PU 10 pieces	**24560-355**
Guide rail with coding, grey 70 mm deep, PU 10 pieces	**24560-360**
Torx panhead screw 2.5 × 9.3, zinc-plated, PU 100 pieces; torque max. 0.2 Nm	**24560-141**
Coding peg PC, UL 94 V-0, RAL 7035, PU 100 pieces	**20817-501**
19" fixing material kit (screw, washer, nut) (8 × screws, 8 × plastic washers, 8 × cage nuts)	**21100-435**

Part number in bold face type: ready for despatch within 2 working days
Part number in normal type: ready for despatch within 10 working days

Subracks – EuropacPRO

Subracks – EuropacPRO

OVERVIEW OF INDIVIDUAL COMPONENTS FOR SHIELDED OR UNSHIELDED SUBRACKS

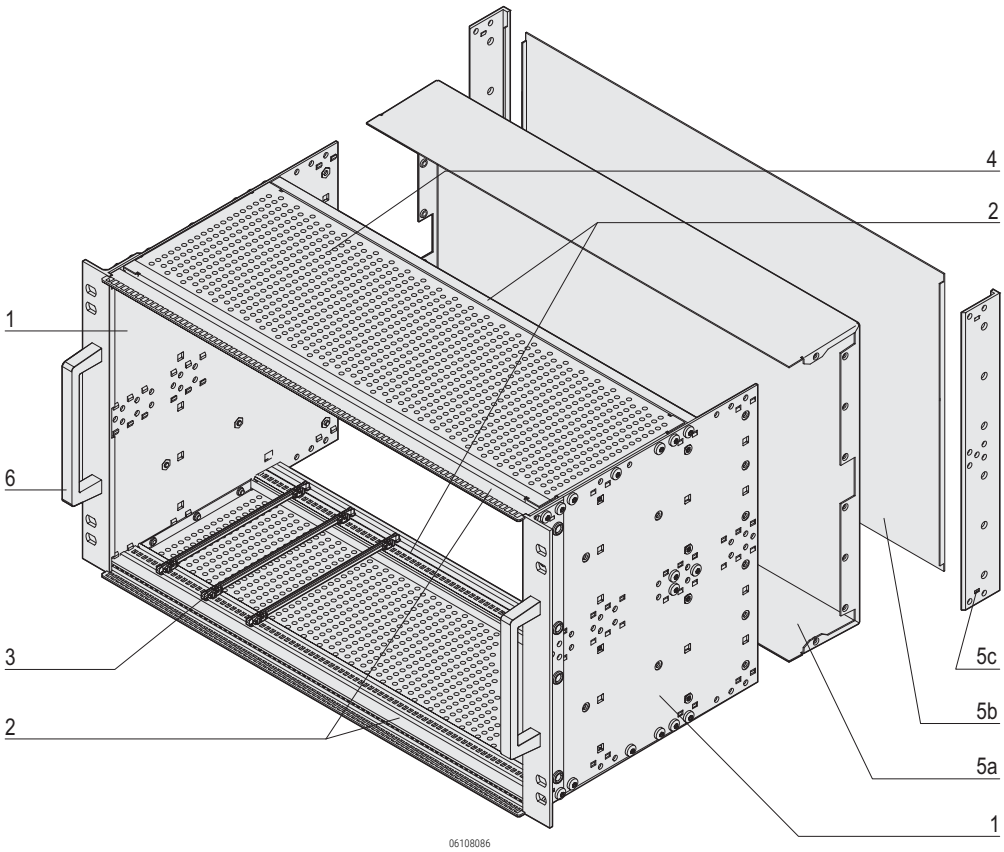

Item	Description	Description	page
Item 1	Side panel	Establishes the height and depth of the subrack; Al, 2 mm, with universal hole positions for assembly of accessories. Three versions: The "flexible" one with separate 19" brackets as well as two others with integrated 19" brackets for "light" and "heavy" applications.	6.21
Item 2	Horizontal rail	Establishes the width of the subrack; Al extrusion, with defined hole positions for guide rails, grooves for threaded inserts, M4 thread, functional rail shapes, basically differing with regard to their mechanical loading capacity: "light" (load up to 7.5 kg) and "heavy" (load > 7.5 kg).	6.29
Item 3	Guide rails	Act as interface between subracks and boards, for different board formats, are available in plastic or metal, optionally codable and can be fitted with ESD clips to allow electrostatic discharge, also optionally.	6.37
Item 4	Cover plates	Provide mechanical protection and/or EMC shielding and are perforated.	6.44
Item 5	Rear/front	Rear hood (5a) or front panel (5b) with corner profile (5c) act as support for EMC shielding gaskets used in conjunction with shielded front panels. Note: Rear hood and corner profile cannot be fitted simultaneously.	6.49
Item 6	Handles	Can be mounted on the 19" brackets.	6.27
–	EMC shielding (without illustration)	Extensive component range for specific shielding of subracks with respect to their application.	6.54
–	Interior assemblies (without illustration)	Universal assemblies, e.g. for horizontal and vertical assembly and for mounting plates.	6.59

Part number in bold face type: ready for despatch within 2 working days
Part number in normal type: ready for despatch within 10 working days

Subracks – EuropacPRO

SUBRACK DIMENSIONS

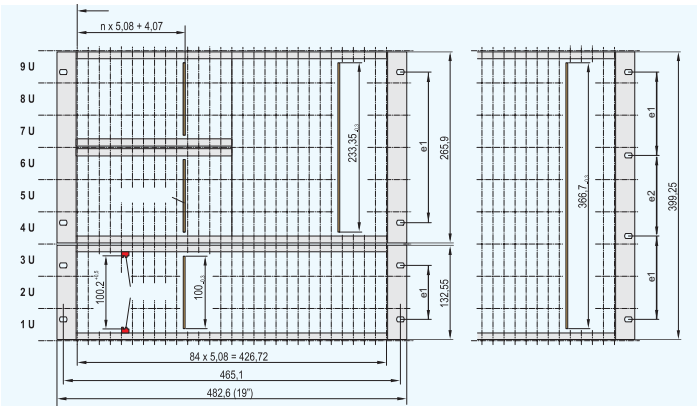

20304051

- Dimensions in accordance with international standards EC 60297-3-100, IEEE 1101.1/.10/.11; please see the SCHROFF Standards Summary for details
- Side panels
  - Aluminium, 2 mm
  - Round holes for mounting horizontal rails (depth grid 15 mm)
  - Impressions on the inner side of the side panel act as an anti-rotation guard and positioning aid for the horizontal rails
  - Square holes (6 x 6 mm) provide universal fixing for components such as backplane shielding; version without square holes available on request

06197003

Depth grid

The depth grid is 15 mm, the mounting holes in the side panel are decisive for the configurability of individual components; thus any combination of various individual parts is possible

06108008

Side panel 3 U, 6 U and 9 U

3 and 6 U side panels have the same hole positions (the 6 U is a doubling vertically of the 3 U); thus subdivisions can be made in the vertical dimension (6 U: 2 x 3 U; 9 U: 3 x 3 U)

06108011

Side panel 4 U

4 U side panels have the same hole positions as 3 U and additionally 1 U (above or beneath the 3 U installation); this height allows the construction of a 3 U unit with 1 U clearance for cabling or airflow

SIDE PANELS

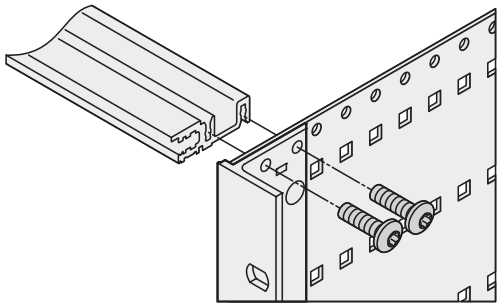

Side panel - horizontal rail assembly

06108062

- Aluminium
- Round holes for mounting horizontal rails (depth grid 15 mm)
- Impressions on the inner side of the side panel act as an anti-rotation guard and positioning aid for the horizontal rails
- Square holes (6 x 6 mm) provide universal fixing for components such as backplane shielding; version without square holes available on request
- Only one type of screw driver is needed for the assembly (torx panhead screw, M4 x 14; torque side panel - horizontal rail 2.4 Nm; torque side panel - cover plate 1.3 Nm)
- 4 versions of the side panel:
  - Type F = flexible
  - Type H = heavy
  - Type L = light
  - Type R = rugged

NOTE

- Type R - rugged side panels see "Rugged Subracks" section, page 6.97

06197003

Type F (flexible)

- Universal version: 19" bracket (please order separately) can be fitted variably to front, rear or depth-offset
- Heights: 3, 4, 6 and 9 U
  Depths: 175, 235, 275, 277.75, 295, 355, 415 and 475 mm;
  Other dimensions on request
- 2 EMC shielding concepts for the front/rear:
  stainless steel or textile EMC gasket
- Installed load up to 11 kg

06197004

Type H (heavy)

- 19" bracket is tox-cold welded to side panel; particularly designed for mechanically demanding environments (vibration resistance, applications requiring high levels of shock and vibration, e.g. IEC 61587-2)
- Heights: 3 and 6 U
  Depths: 175, 235, 295 and 355 mm
  Other dimensions on request
- 2 EMC shielding concepts for the front/rear:
  with stainless steel or textile EMC gasekt
- Installed load up to 15 kg

06197002

Type L (light)

- Side panel with moulded 19" bracket,
  for standard applications, unshielded
- Particularly cost-effective version
  (not suitable for EMC applications)
- Heights: 3 and 6 U
  Depths: 175, 235 and 295 mm
  Other dimensions on request
- Installed load up to 7.5 kg

Subracks – EuropacPRO

SIDE PANELS TYPE F FOR STAINLESS STEEL GASKET

ORDER INFORMATION

			Side panel type F	19" bracket without handle holes	19" bracket with handle holes	19" bracket depth-adjustable	EMC gasket (stainless steel)	Rear angle	Side panel connection
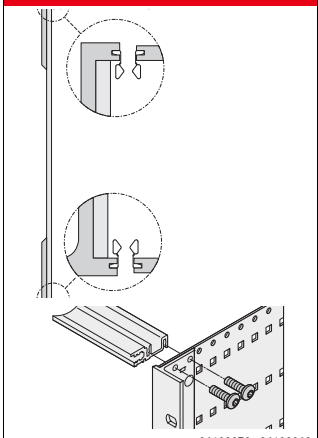 06108070 06108062			06197003 without 19" bracket, Al, 2 mm, passivated, please order 19" bracket and corner profile separately	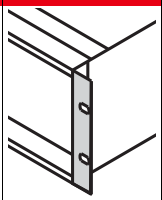 bza45819 with lateral grooves for stainless steel EMC gasket, Al extrusion, rear side etched, front anodised	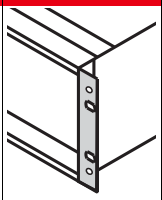 06106050 with lateral grooves for stainless steel EMC gasket, Al extrusion, rear side etched, front anodised please order front handles separately,	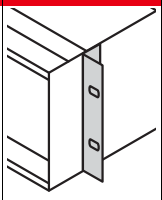 06102501 Al extrusion, passivated	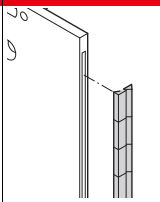 BGA45760 inserted laterally into the grooves of the front panel	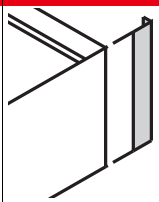 BZA46573 Al extrusion, surface clear passivated; with lateral grooves for stainless steel EMC gasekt; rear hood cannot be mounted simultaneously	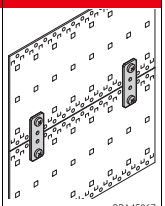 BPA45867 Zn die-cast, incl. fixing material kit, for connecting two by two side panels (on top of each other)
Height U	Depth mm		1 piece	PU 1 pair	PU 1 pair	PU 1 pair	PU 10 pieces	PU 1 pair	PU 4 pieces
3	175		**34560-185**	**24560-197**	**24560-198**	**24560-199**	**21101-705**	**24561-198**	**21101-954**
3	235		**34560-187**						
3	275	1)	**34579-300**						
3	277.75	2)	**34579-002**						
3	295		**34560-189**						
3	355		**34560-191**						
3	415		**34560-193**						
3	475		**34560-195**						
4	175	3)	**34560-285**	**24560-297**	**24560-298**	**24560-299**	**21101-713**	**24561-298**	**21101-954**
4	235	3)	**34560-287**						
4	295	3)	**34560-289**						
4	355	3)	**34560-291**						
4	415	3)	**34560-293**						
4	475	3)	**34560-295**						
6	175		**34560-485**	**24560-497**	**24560-498**	**24560-499**	**21101-707**	**24561-498**	**21101-954**
6	235		**34560-487**						
6	275	1)	**34579-038**						
6	277.75	2)	**34579-012**						
6	295		**34560-489**						
6	355		**34560-491**						
6	415		**34560-493**						
6	475		**34560-495**						
6	970		**34560-496**						
9	175		**34560-785**	**24560-797**	**24560-798**	**24560-799**	**21101-709**	**24561-798**	**21101-954**
9	235		**34560-787**						
9	295		**34560-789**						
9	355		**34560-791**						
9	415		**34560-793**						
Screw, M4 x 14, PU 100 pieces, for fastening horizontal rail to side panel			**24560-130**	**24560-130**	**24560-130**	**24560-130**	–	**24560-130**	–
Screw, M4 x 10, required if guide rails are screwed to slot 1, PU 100 pieces			**24560-155**	**24560-155**	**24560-155**	**24560-155**	–	**24560-155**	–

1) CompactPCI 2) VME64x 3) Grid holes of side panel 3 + 1 U

• View of side panels 3, 4, 6, 9 U see page 6.20

Subracks – EuropacPRO

SIDE PANELS TYPE F FOR TEXTILE EMC GASKET

ORDER INFORMATION

Illustration shows standard assembly, not VME or CompactPCI bus with rear I/O	Side panel type F	19" bracket without handle holes	19" bracket with handle holes	19" bracket depth-adjustable	EMC gasket (textile)	Rear angle	Side panel connection
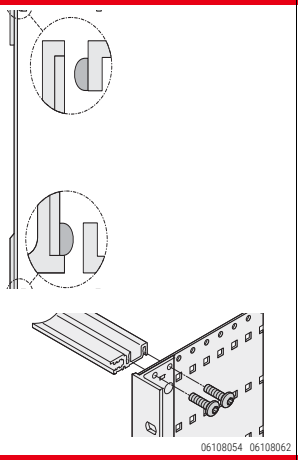 06108054 06108062	06197003 without 19" bracket, Al, 2 mm, passivated, please order 19" bracket and corner profile separately	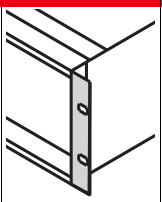 bza45819 Al extrusion for textile EMC gasket rear side etched, front anodised	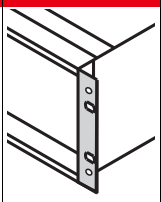 06106050 Al extrusion for textile EMC gasket, rear side etched, front anodised, please order front handles separately, see page 6.27	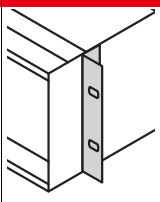 06102501 Al extrusion, passivated	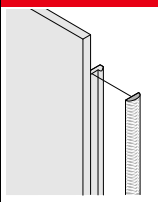 04602054 textile gasket, core: foam, sleeve: textile cladding with CuNi coating, UL 94 V-0	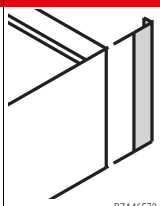 BZA46573 Al extrusion, etched; for textile EMC gasket	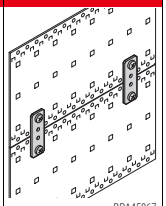 BPA45867 Zn die-cast, incl. fixing material kit, for connecting two by two side panels (on top of each other)
Height U / Depth mm	1 piece	PU 1 pair	PU 1 pair	PU 1 pair	PU 10 pieces	PU 1 pair	PU 4 pieces
3 175	**34560-185**	**24564-197**	**24564-198**	**24560-199**	**21101-853**	**24564-199**	**21101-954**
3 235	**34560-187**						
3 275 1)	**34579-300**						
3 277.75 2)	**34579-002**						
3 295	**34560-189**						
3 355	**34560-191**						
3 415	**34560-193**						
3 475	**34560-195**						
4 175 3)	**34560-285**	**24564-297**	**24564-298**	**24560-299**	**21101-858**	**24564-299**	**21101-954**
4 235 3)	**34560-287**						
4 295 3)	**34560-289**						
4 355 3)	**34560-291**						
4 415 3)	**34560-293**						
4 475 3)	**34560-295**						
6 175	**34560-485**	**24564-497**	**24564-498**	**24560-499**	**21101-855**	**24564-499**	**21101-954**
6 235	**34560-487**						
6 275 1)	**34579-038**						
6 277.75 2)	**34579-012**						
6 295	**34560-489**						
6 355	**34560-491**						
6 415	**34560-493**						
6 475	**34560-495**						
6 970	**34560-496**						
9 175	**34560-785**	**24564-797**	**24564-798**	**24560-799**	**21101-859**	**24564-799**	**21101-954**
9 235	**34560-787**						
9 295	**34560-789**						
9 355	**34560-791**						
9 415	**34560-793**						
Screw, M4 x 14, PU 100 pieces, for fastening horizontal rail to side panel	**24560-130**	**24560-130**	**24560-130**	**24560-130**	–	**24560-130**	–
Screw, M4 x 10, required if guide rails are screwed to slot 1, PU 100 pieces	**24560-155**	**24560-155**	**24560-155**	**24560-155**	–	**24560-155**	–

1) CompactPCI 2) VME64x 3) Grid holes of side panel 3 + 1 U

Part number in bold face type: ready for despatch within 2 working days
Part number in normal type: ready for despatch within 10 working days

SIDE PANELS TYPE H FOR STAINLESS STEEL EMC GASKET

ORDER INFORMATION

			Side panel type H for stainless steel EMC gasket			Rear angle	Side panel connection
			without handle holes	with handle holes	EMC gasket (stainless steel)		
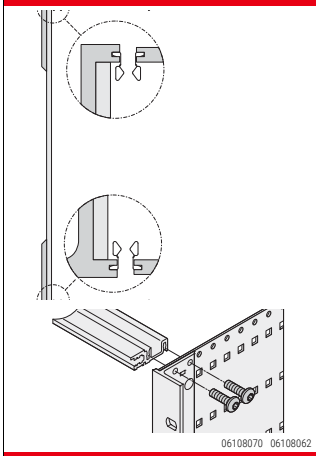 06108070 06108062			06197004 for high mechanical demands, 19" bracket, tox-cold welded, Al, 2 mm, clear passivated, front anodised	06107001 for high mechanical demands, 19" bracket, tox-cold welded, Al, 2 mm, clear passivated, front anodised, please order front handles separately see page 6.27	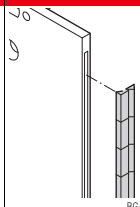 BGA45760 inserted laterally into the grooves of the front panel	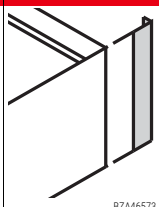 BZA46573 Al extrusion, surface clear passivated; with lateral grooves for stainless steel EMC gasekt; rear hood cannot be mounted simultaneously	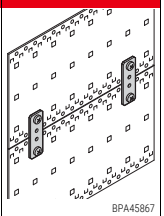 BPA45867 Zn die-cast, incl. fixing material kit, for connecting two by two side panels (on top of each other)
Height U	Depth mm		PU 1 pair	PU 1 pair	PU 10 pieces	PU 1 pair	PU 4 pieces
3	175		**24566-125**	**24567-125**	**21101-705**	**24561-198**	**21101-954**
3	235		**24566-127**	**24567-127**			
3	275	1)	–	–			
3	277.75	2)	–	–			
3	295		**24566-129**	**24567-129**			
3	355		**24566-131**	**24567-131**			
3	415		–	–			
3	475		–	–			
4	175	3)	–	–	–	–	–
4	235	3)					
4	295	3)					
4	355	3)					
4	415	3)					
4	475	3)					
6	175		**24566-425**	**24567-425**	**21101-707**	**24561-498**	**21101-954**
6	235		**24566-427**	**24567-427**			
6	275	1)	–	–			
6	277.75	2)	–	–			
6	295		**24566-429**	**24567-429**			
6	355		**24566-431**	**24567-431**			
6	415		–	–			
6	475		–	–			
6	970		–	–			
9	175		–	–	–	–	–
9	235						
9	295						
9	355						
9	415						
Screw, M4 x 14, PU 100 pieces, for fastening horizontal rail to side panel			**24560-130**	**24560-130**	–	**24560-130**	–
Screw, M4 x 10, required if guide rails are screwed to slot 1, PU 100 pieces			**24560-155**	**24560-155**	–	**24560-155**	–

1) CompactPCI 2) VME64x 3) Grid holes of side panel 3 + 1 U

Subracks – EuropacPRO

SIDE PANELS TYPE H FOR TEXTILE EMC GASKET

ORDER INFORMATION

Illustration shows standard assembly, not VME or CompactPCI bus with rear I/O		Side panel type H for textile EMC gasket without handle holes	with handle holes	EMC gasket (textile)	Rear angle	Side panel connection
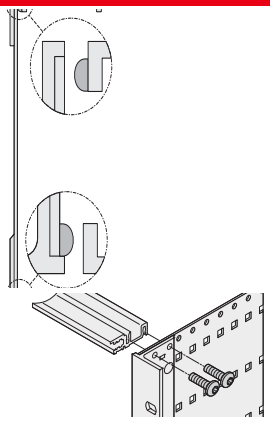 06108070 06108062		06197004 for high mechanical	06107001 for high mechanical demands, 19" bracket,	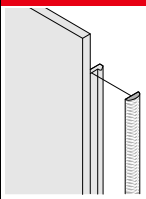 04602054 textile gasket, core: foam, sleeve: textile cladding with CuNi coating, UL 94 V-0	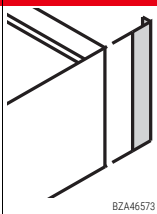 BZA46573 Al extrusion, etched; for textile EMC gasket	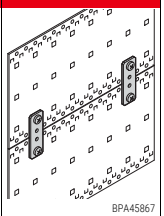 BPA45867 Zn die-cast, incl. fixing material kit, for connecting two by two side panels (on top of each other)
Height U	Depth mm	PU 1 pair	PU 1 pair	PU 10 pieces	PU 1 pair	PU 4 pieces
3	175	**24564-145**	**24566-145**	**21101-853**	**24564-199**	**21101-954**
3	235	**24564-147**	**24566-147**			
3	275 1)	–	–			
3	277.75 2)	–	–			
3	295	**24564-149**	**24566-149**			
3	355	**24564-151**	**24566-151**			
3	415	–	–			
3	475	–	–			
4	175 3)	–	–	–	–	–
4	235 3)					
4	295 3)					
4	355 3)					
4	415 3)					
4	475 3)					
6	175	**24564-445**	**24566-445**	**21101-855**	**24564-499**	**21101-954**
6	235	**24564-447**	**24566-447**			
6	275 1)	–	–			
6	277.75 2)	–	–			
6	295	**24564-449**	**24566-449**			
6	355	**24564-451**	**24566-451**			
6	415	–	–			
6	475	–	–			
6	970	–	–			
9	175	–	–	–	–	–
9	235					
9	295					
9	355					
9	415					
Screw, M4 x 14, PU 100 pieces, for fastening horizontal rail to side panel		**24560-130**	**24560-130**	–	**24560-130**	–
Screw, M4 x 10, required if guide rails are screwed to slot 1, PU 100 pieces		**24560-155**	**24560-155**	–	**24560-155**	–

1) CompactPCI 2) VME64x 3) Grid holes of side panel 3 + 1 U

Part number in bold face type: ready for despatch within 2 working days
Part number in normal type: ready for despatch within 10 working days

SIDE PANELS TYPE L

ORDER INFORMATION

		Side panel type L	Front cover	Collar screw with slot for assembly of front cover	Sleeves for assembly of front cover	Side panel connection
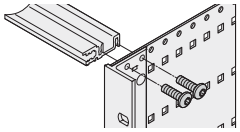 06108062		06197002 Al, 2 mm, passivated	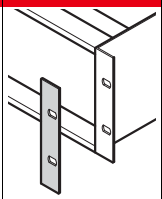 BZA45810 for decorative finish of 19" bracket, Al, 2 mm, anodised	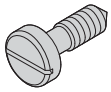 06708055 M6 x 16, St, nickel-plated	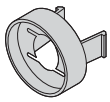 00508056 PPE, black	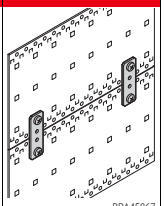 BPA45867 Zn die-cast, incl. fixing material kit, for connecting two by two side panels (on top of each other)
Height U	Depth mm	1 piece		PU 100 pieces	PU 100 pieces	PU 4 pieces
3	175	**34561-185**	**34561-197**	**21100-565**	**21100-566**	**21101-954**
3	235	**34561-187**				
3	275 1)	–				
3	277.75 2)	–				
3	295	**34561-189**				
3	355	–				
3	415	–				
3	475	–				
4	175 3)	–	–	–	–	–
4	235 3)					
4	295 3)					
4	355 3)					
4	415 3)					
4	475 3)					
6	175	**34561-485**	**34561-497**	**21100-565**	**21100-566**	**21101-954**
6	235	**34561-487**				
6	275 1)	–				
6	277.75 2)	–				
6	295	**34561-489**				
6	355	–				
6	415	–				
6	475	–				
6	970	–				
9	175	–	–	–	–	–
9	235					
9	295					
9	355					
9	415					
Screw, M4 x 14, PU 100 pieces, for fastening horizontal rail to side panel		**24560-130**	–	–	–	–
Screw, M4 x 10, required if guide rails are screwed to slot 1, PU 100 pieces		**24560-155**	–	–	–	–

1) CompactPCI 2) VME64x 3) Grid holes of side panel 3 + 1 U

Subracks – EuropacPRO

FRONT HANDLES, WALL-MOUNTING BRACKETS

ORDER INFORMATION

Front handle Straight version	Angled version			Front handle clear anodised, straight version	black anodised, straight version	clear anodised, angled version	Universal front handle	Wall-mounting bracket
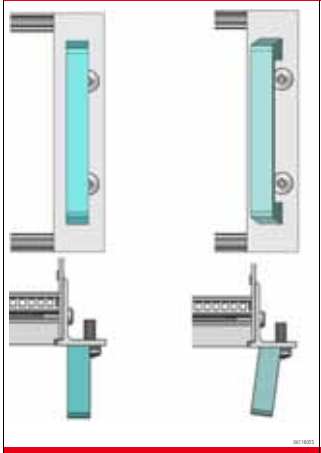				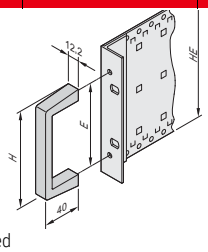 06102068 Al extrusion, anodised load-carrying capacity 30 kg			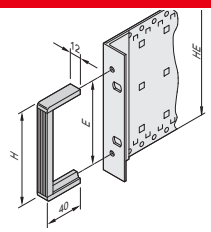 06102069 3 parts: Al extrusion, clear anodised, 2 end pieces, plastic, PA, black; width 12 mm, depth 40 mm load-carrying capacity 10 kg	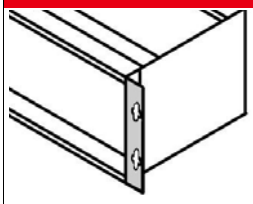 06104063 Al, 2.5 mm, passivated; bolted to subrack in place of the 19" bracket
Height U	Depth mm	H mm	E mm	1 piece (SPQ 10)[1]	1 piece (SPQ 10)[1]	1 piece (SPQ 10)[1]	1 piece (SPQ 10)[1]	PU 1 pair
3	175	102	88.0	**10501-005**	**10501-026**	**10501-020**	**10502-057**	**24562-197**
3	235	102	88.0					
3	275	102	88.0					
3	277.75	102	88.0					
3	295	102	88.0					
3	355	102	88.0					
3	415	102	88.0					
3	475	102	88.0					
4	175	146	133.4	**10501-018**	–	**10501-021**	**10502-060**	24562-297
4	235	146	133.4					
4	295	146	133.4					
4	355	146	133.4					
4	415	146	133.4					
4	475	146	133.4					
6	175	249	235.0	**10501-008**	**10501-029**	**10501-022**	**10502-065**	**24562-497**
6	235	249	235.0					
6	275	249	235.0					
6	277.75	249	235.0					
6	295	249	235.0					
6	355	249	235.0					
6	415	249	235.0					
6	475	249	235.0					
6	970	249	235.0					
9	175	249	235.0	**10501-008**	**10501-029**	**10501-022**	**10502-065**	24562-797
9	235	249	235.0					
9	295	249	235.0					
9	355	249	235.0					
9	415	249	235.0					
Screw M5 x 12, PU 100 pieces				**24560-183**	**24560-183**	**24560-183**	**24560-183**	–
Screw M5 x 12, PU 4 pieces				**24560-182**	**24560-182**	**24560-182**	**24560-182**	–
Screw, M4 x 14, PU 100 pieces				–	–	–	–	**24560-130**

1) SPQ (standard pack quantity): Part number includes 1 piece, but delivery is exclusively made in standard pack quantity (SPQ); please order at least the SPQ quantity or a multiple

Part number in bold face type: ready for despatch within 2 working days
Part number in normal type: ready for despatch within 10 working days

Subracks – EuropacPRO

HORIZONTAL RAILS

06197007

light

06197008

heavy

06112004

rugged

- Aluminium profile, surface anodised, conductive contact surfaces for EMC gaskets
- The horizontal rail is marked with sequential numbering (for sizes > 28 HP) to facilitate positioning of the guide rails
- Horizontal rails are fixed to the side panel using M4 bolts with torx 20 drive
- There are 3 different horizontal rails for different loading levels
  - light, for up to 7.5 kg
  - heavy, for 7.5 kg to 15 kg
  - rugged, for 15 kg to approx. 60 kg

MOUNTING POSITION OF THE HORIZONTAL RAILS

PCB as deep as side panel

front rear

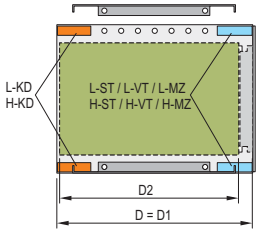

06112081

160, 220, 280 mm, ...

Cabling space behind backplane

front rear

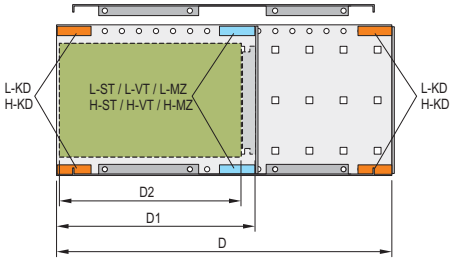

06112083

160, 220, 280 mm, ...

Rear I/O installation (CompactPCI, VME64x applications)

front rear

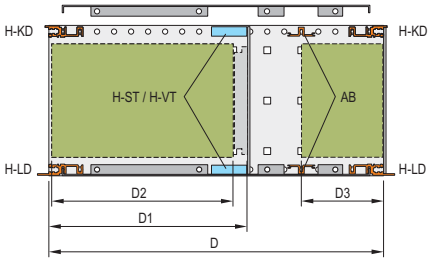

06112085

160 mm/80 mm

3 U

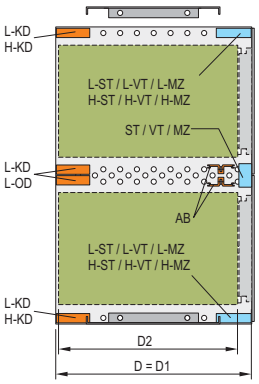

06112088

160, 220, 280 mm, ...

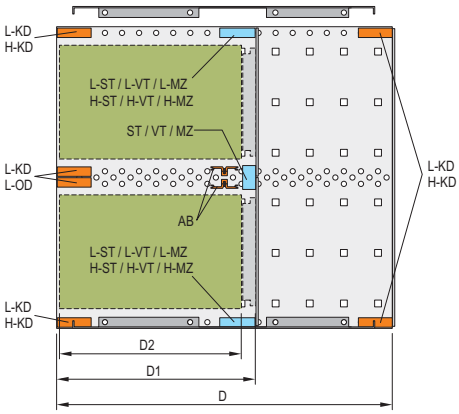

06112087

160, 220, 280 mm, ...

6 U = 3 U + 3 U

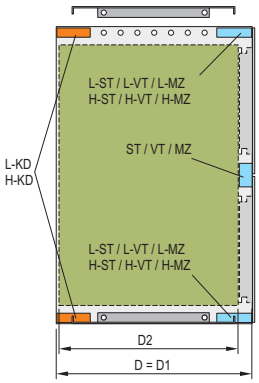

06112082

160, 220, 280 mm, ...

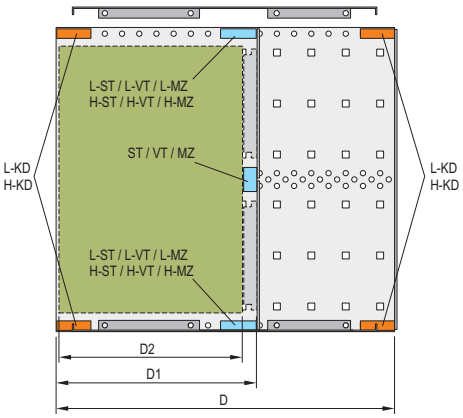

06112084

160, 220, 280 mm, ...

6 U

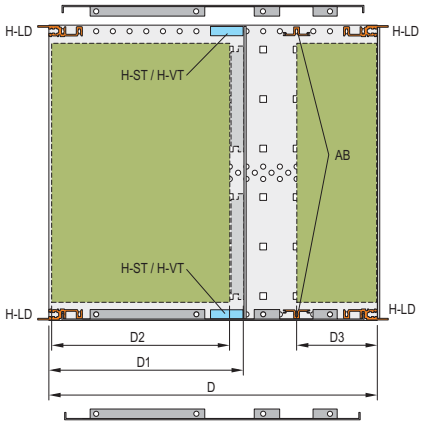

06112086

160 mm/80 mm

Subracks – EuropacPRO

FRONT HORIZONTAL RAILS

Assembly 3 U, 2 x 3 U, 6 U

"light" (L)

06197007

"heavy" (H)

06197008

"heavy" (H)

06197009

3 U/6 U

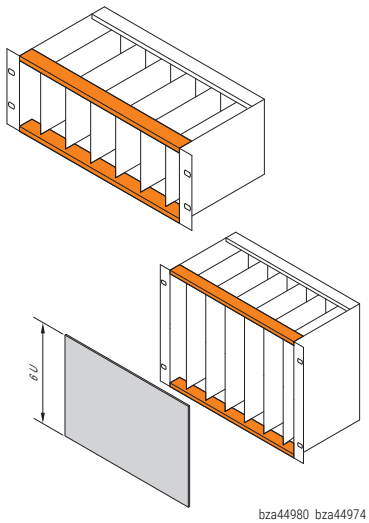

bza44980 bza44974

Short lip

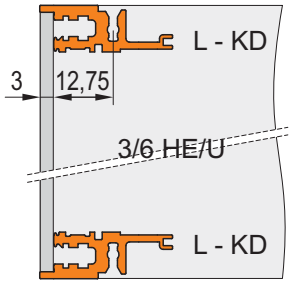

06105060

Short lip

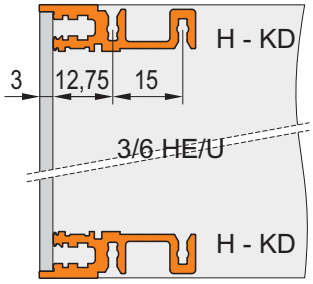

06105061

Long lip

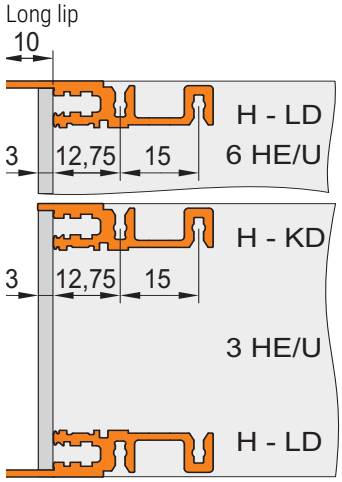

06108063

2 x 3 U

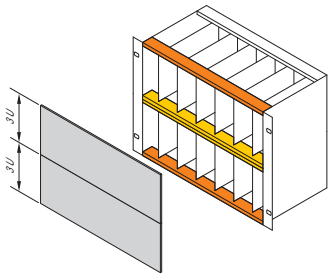

bza44972

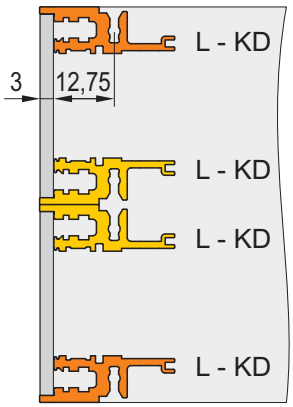

06105062

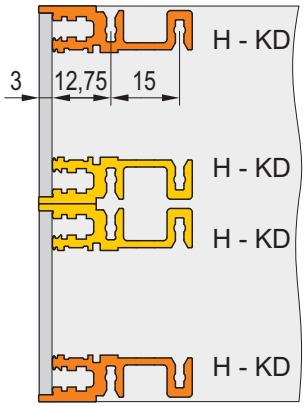

06105063

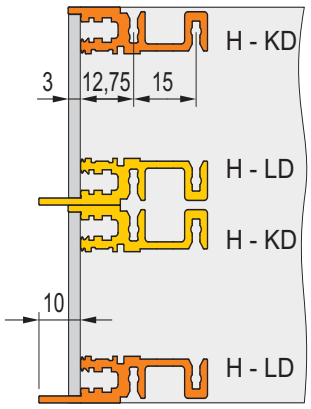

06108064

2 x 3 U, 6 U

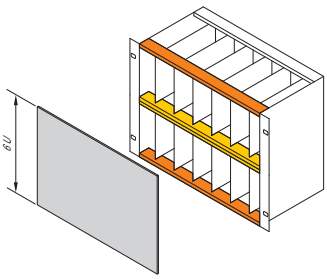

06105059

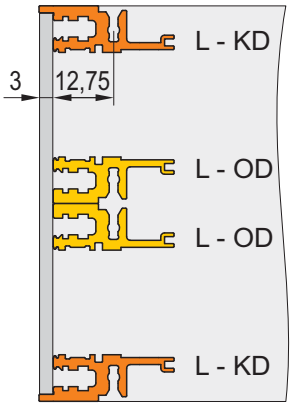

06105064

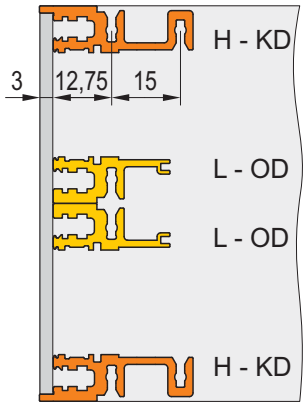

06105065

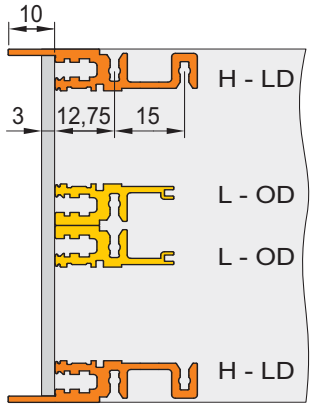

06108065

L-OD = Light - without lip, L-KD = Light - short lip, H-KD = Heavy - short lip, H-LD = Heavy - long lip

Part number in bold face type: ready for despatch within 2 working days
Part number in normal type: ready for despatch within 10 working days

FRONT HORIZONTAL RAILS

ORDER INFORMATION

		"light" Type L-OD without lip	"light" Type L-KD short lip	"heavy" Type H-KD short lip	With long lip for insertion/ extraction of CompactPCI and VME64x boards "heavy" Type H-LD long lip
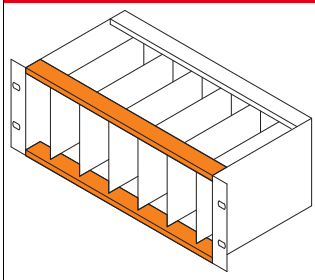 bza44980		06197006	06197007	06197008	06197009
With HP markings from 28 HP, Al extrusion, anodised finish, conductive contact surface		Al extrusion, anodised finish, conductive contact surface, with printed HP markings without lip: 2 x 3 U installation and continuous 6 U front panel	Al extrusion, anodised finish, conductive contact surface, with printed HP markings short lip: horizontal rail and front panel form a single plane	Al extrusion, anodised finish, conductive contact surface, with printed HP markings short lip: horizontal rail and front panel form a single plane	Al extrusion, anodised finish, conductive contact surface, with printed HP markings long lip: for insertion/extraction of CompactPCI or VME64x boards
Usable length HP	Length mm	1 piece (SPQ 10)[1)]	1 piece (SPQ 10)[1)]	1 piece (SPQ 10)[1)]	1 piece (SPQ 10)[1)]
20	106.68	**34560-020**	**34560-120**	**34560-220**	**34560-320**
28	147.32	**34560-028**	**34560-128**	**34560-228**	**34560-328**
40	208.28	**34560-040**	**34560-140**	**34560-240**	**34560-340**
42	218.44	**34560-042**	**34560-142**	**34560-242**	**34560-342**
63	325.12	**34560-063**	**34560-163**	**34560-263**	**34560-363**
84	431.80	**34560-084**	**34560-184**	**34560-284**	**34560-384**
–	1000	**34560-001**	**34560-101**	**34560-201**	**34560-301**
Screw, M4 x 14, PU 100 pieces		**24560-130**	**24560-130**	**24560-130**	**24560-130**
Screw, M4 x 10, required if guide rails are screwed to slot 1, PU 100 pieces		–	–	**24560-155**	**24560-155**
Threaded inserts see page		6.35	6.35	6.35	6.35

1) SPQ (standard pack quantity): Part number includes 1 piece, but delivery is exclusively made in standard pack quantity (SPQ); please order at least the SPQ quantity or a multiple
"light": loading capacity up to approx. 7.5 kg; "heavy": loading capacity > 7.5 kg

NOTE

- 1000 mm version without M4 thread to front, without printed markings and without notch for 19"-bracket
- Rugged horizontal rails with 3 fixing holes see section "Rugged Subracks", page 6.99

Subracks – EuropacPRO

REAR HORIZONTAL RAILS

Indirect backplane mounting (with insulation strip)

04400001

Direct backplane mounting

04400002

Connector fitting with Z

04400003

"light"

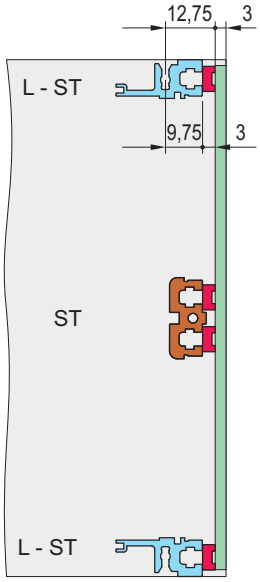

06105072

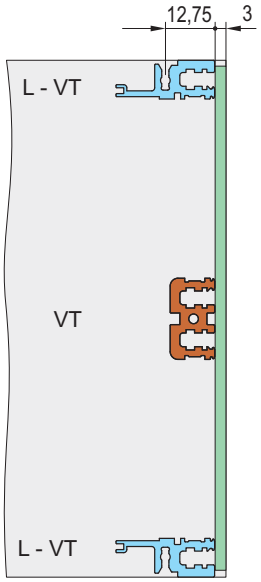

06105073

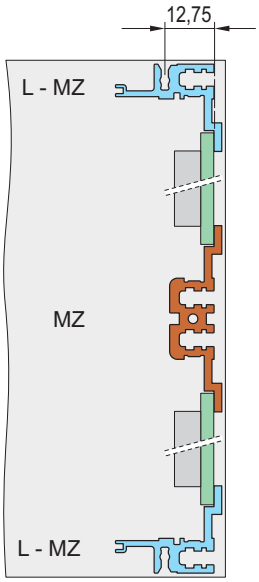

06105071

"heavy"

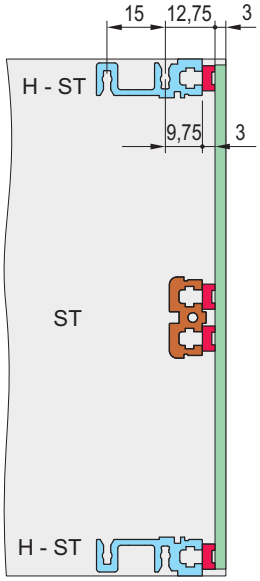

06108066

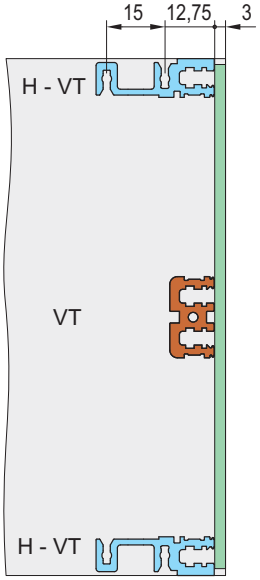

06108067

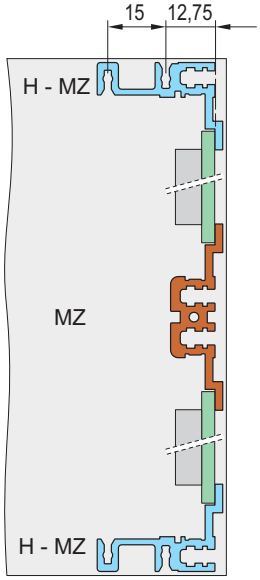

06108068

ST = standard, L = light, H = heavy

VT = depth-offset, L = light, H = heavy

MZ = with Z-rail, L = light, H = heavy

Part number in bold face type: ready for despatch within 2 working days
Part number in normal type: ready for despatch within 10 working days

Subracks – EuropacPRO

REAR HORIZONTAL RAILS, TOP AND BOTTOM

ORDER INFORMATION

		For indirect backplane mounting with insulation strip		For direct backplane mounting		For direct fixing of connectors in accordance with EN 60603-2 (DIN 41612)	
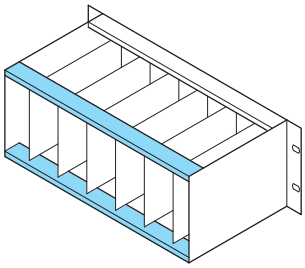 06105074		04400001		04400002		04400003	
		"light" Type L-ST standard	"heavy" Type H-ST standard	"light" Type L-VT + 3 mm	"heavy" Type H-VT + 3 mm	"light" Type L-MZ with Z-rail	"heavy" Type H-MZ with Z-rail
		06197010	06197011	06197011	06197009	06197014	06197015
With HP markings from 28 HP, Al extrusion, anodised finish, conductive surface		Al extrusion, anodised surface, conductive contact surface, with printed HP markings	Al extrusion, anodised surface, conductive contact surface, with printed HP markings	Al extrusion, anodised surface, conductive contact surface, with printed HP markings	Al extrusion, anodised surface, conductive contact surface, with printed HP markings	Al extrusion, anodised surface, conductive contact surface, with printed HP markings	Al extrusion, anodised surface, conductive contact surface, with printed HP markings
Usable length HP	Length mm	1 piece (SPQ 10)[1]	1 piece (SPQ 10)[1]	1 piece (SPQ 10)[1]	1 piece (SPQ 10)[1]	1 piece (SPQ 10)[1]	1 piece (SPQ 10)[1]
20	106.68	**34560-420**	**34560-520**	**34560-620**	**34560-720**	**34560-820**	**34560-920**
28	147.32	**34560-428**	**34560-528**	**34560-628**	**34560-728**	**34560-828**	**34560-928**
40	208.28	**34560-440**	**34560-540**	**34560-640**	**34560-740**	**34560-840**	**34560-940**
42	218.44	**34560-442**	**34560-542**	**34560-642**	**34560-742**	**34560-842**	**34560-942**
63	325.12	**34560-463**	**34560-563**	**34560-663**	**34560-763**	**34560-863**	**34560-963**
84	431.80	**34560-484**	**34560-584**	**34560-684**	**34560-784**	**34560-884**	**34560-984**
–	1000	**34560-401**	**34560-501**	**34560-601**	**34560-701**	**34560-801**	–
Screw, M4 x 14, PU 100 pieces, for fastening horizontal rail to side panel		**24560-130**	**24560-130**	**24560-130**	**24560-130**	**24560-130**	**24560-130**
Screw, M4 x 10, required if guide rails are screwed to slot 1, PU 100 pieces		–	**24560-155**	–	**24560-155**	–	**24560-155**
Perforated rail for connector mounting with insulation strip see page		6.36	6.36	–	–	–	–
Z-rail for connector mounting without insulation strip see page		6.36	6.36	–	–	–	–
Insulation strips see page		6.35	6.35	–	–	–	–
Threaded inserts see page		6.35	6.35	6.35	6.35	6.35	6.35

1) SPQ (standard pack quantity): Part number includes 1 piece, but delivery is exclusively made in standard pack quantity (SPQ); please order at least the SPQ quantity or a multiple
"light": loading capacity up to approx. 7.5 kg; "heavy": loading capacity > 7.5 kg

NOTE

- 1000 mm version without M4 thread to front, without printed markings and without notch for 19"-bracket
- Rugged horizontal rails with 3 fixing holes see section "Rugged Subracks", page 6.99

Subracks – EuropacPRO

REAR HORIZONTAL RAILS, CENTRE, FOR 6 U

ORDER INFORMATION

		For indirect backplane mounting with insulation strip	For direct backplane mounting	For direct fixing of connectors in accordance with EN 60603-2 (DIN 41612)
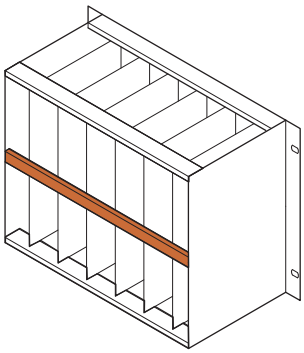 06108090		04400001 Typ ST 06197016 Al extrusion, anodised surface, conductive contact surface, without printed markings	04400002 Typ VT 06197017 Al extrusion, anodised surface, conductive contact surface, without printed markings	04400003 Typ MZ 06197018 Al extrusion, anodised surface, conductive contact surface, without printed markings
Usable length HP	Length mm	1 piece (SPQ 10)[1]	1 piece (SPQ 10)[1]	1 piece (SPQ 10)[1]
20	106.68	**34561-020**	**34561-120**	**34561-220**
28	147.32	**34561-028**	**34561-128**	**34561-228**
40	208.28	**34561-040**	**34561-140**	**34561-240**
42	218.44	**34561-042**	**34561-142**	**34561-242**
63	325.12	**34561-063**	**34561-163**	**34561-263**
84	431.80	**34561-084**	**34561-184**	**34561-284**
–	1000	**34561-001**	**34561-101**	**34561-201**
Screw, M4 x 14, PU 100 pieces, for fastening horizontal rail to side panel		**24560-130**	**24560-130**	**24560-130**
Insulation strips see page		6.35	–	–
Threaded inserts see page		6.35	6.35	6.35

1) SPQ (standard pack quantity): Part number includes 1 piece, but delivery is exclusively made in standard pack quantity (SPQ);
please order at least the SPQ quantity or a multiple
"light": loading capacity up to approx. 7.5 kg; "heavy": loading capacity > 7.5 kg

NOTE

- All horizontal rails without printed markings
- 1000 mm version without M4 thread to front

Part number in bold face type: ready for despatch within 2 working days
Part number in normal type: ready for despatch within 10 working days

Subracks – EuropacPRO

HORIZONTAL RAILS (TYPE AB) FOR REAR I/O APPLICATIONS

ORDER INFORMATION

		For CompactPCI in rear I/O area
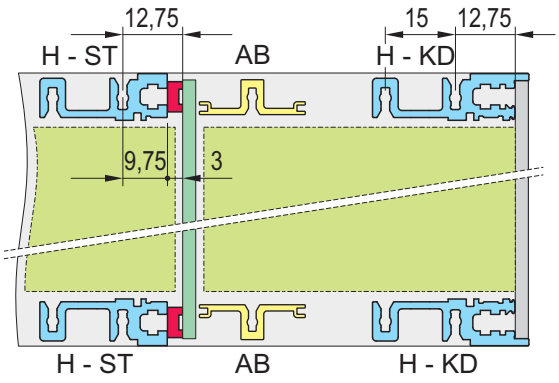		 06108009 Typ AB 06197019
	06108069	Al extrusion, anodised surface, conductive contact surface; horizontal rail type AB (AB = support) is required to fix the 80 mm rear I/O boards; without printed markings
Usable length HP	Length mm	1 piece (SPQ 10)[1]
20	106.68	**34561-520**
28	147.32	**34561-528**
40	208.28	**34561-540**
42	218.44	**34561-542**
63	325.12	**34561-563**
84	431.80	**34561-584**
–	1000	**34561-501**
Screw, M4 x 14, PU 100 pieces, for fastening horizontal rail to side panel		**24560-130**

1) SPQ (standard pack quantity): Part number includes 1 piece, but delivery is exclusively made in standard pack quantity (SPQ); please order at least the SPQ quantity or a multiple
"light": loading capacity up to approx. 7.5 kg; "heavy": loading capacity > 7.5 kg

NOTE

- All horizontal rails without printed markings
- 1000 mm version without M4 thread to front

ORDER INFORMATION

	Threaded insert M2.5	Threaded insert M3	Perforated strip (item 1)	Insulation strip
	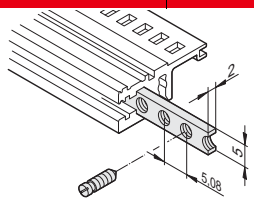 required for fixing the front panel to the horizontal rail; St, zinc-plated; use collar screw 12.3 mm, see page 6.66		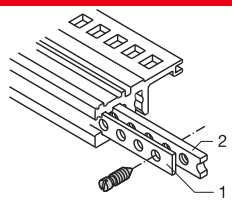 for centring shielded plug-in units, Al, 1 mm, please order grub screw separately	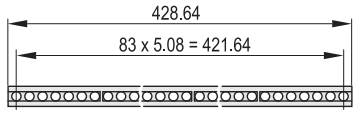 for insulated backplane mounting; PBT UL 94 V-0, grey

Usable length HP	Threaded insert Length mm	1 piece (SPQ 10)[1]	1 piece (SPQ 10)[1]	Perforated strip Length mm	1 piece (SPQ 10)[1]	Insulation strip Length mm	PU 10 pieces
20	106.18	**34561-320**	–	106.48	**30845-189**	101.50	**24560-820**
28	146.82	**34561-328**	–	147.12	**30845-197**	144.20	**24560-828**
40	207.78	**34561-340**	–	208.08	**30845-209**	205.12	**24560-840**
42	217.94	**34561-342**	–	218.24	**30845-211**	210.40	**24560-842**
63	324.62	**34561-363**	–	324.92	**30845-232**	316.88	**24560-863**
84	431.30	**34561-384**	**34561-484**	431.60	**30845-253**	428.64	**24560-884**
196	1000.26	**34565-196**	–	1000.56	**34565-396**		–
Accessories							
Grub screw M2.5 x 8, PU 100 pieces		**21100-276**	–		–		–
Grub screw M2.5 x 9, PU 100 pieces		–	–		**21101-359**		–
Grub screw M3 x 8, PU 100 pieces		–	**21100-646**		–		–

1) SPQ (standard pack quantity): Part number includes 1 piece, but delivery is exclusively made in standard pack quantity (SPQ); please order at least the SPQ quantity or a multiple

2) Part no. includes one packing unit (PU); delivery is exclusively made in PU

ORDER INFORMATION

		Z-rail for connectors DIN EN 60603-2, DIN 41612 item 1	31-pin, DIN 41617	Perforated rail EN 606032, DIN 41612 item 1
		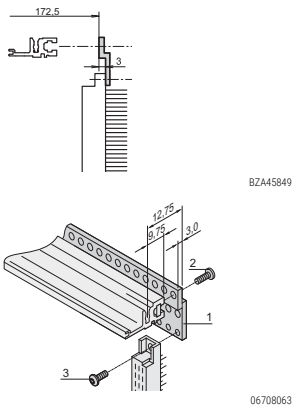 for connector mounting on ST horizontal rails, please order threaded inserts and screw separately	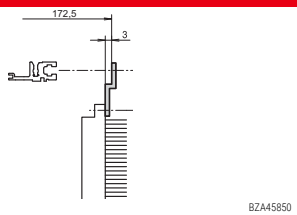 for connector mounting on ST horizontal rails, please order threaded inserts and screw separately	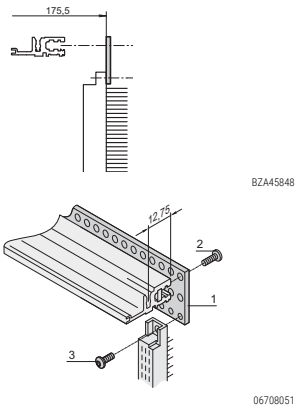 for connector mounting on VT horizontal rails, please order threaded inserts and screw separately
Usable length HP	Length mm	1 piece	1 piece	PU 4 pieces
20	101.60	**30822-025**	–	**20822-051**
28	142.24	**30822-033**	–	**20822-049**
40	203.20	**30822-045**	**30819-763**	**20822-046**
42	213.36	**30822-047**	–	**20822-050**
60	304.80	**30822-065**	**30819-783**	**20822-047**
84	426.72	**30822-089**	**30819-808**	**20822-048**
Item 3, torx panhead screw to fix connector to perforated rail,, M2.5 × 7, PU 100 pieces		**24560-147**	**24560-147**	**24560-147**
Item 2, torx panhead screw, to fix perforated rails to horizontal rail, M2.5 × 10, PU 100 pieces		**24560-148**	**24560-148**	**24560-148**

Subracks – EuropacPRO

GUIDE RAILS

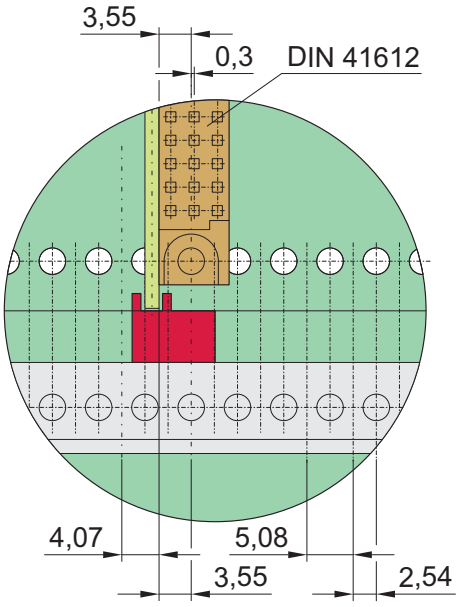

06108083

Front view: position of guide rails to connector (EN 60603-2/ DIN 41612)

Guide rails form the interface between the subrack mechanics and the sub-assemblies (PCBs, plug-in units, frame-type plug-in units, ...).

Guide rails for standard applications are 2 HP wide. Guide rails with coding (e.g. for CompactPCI or VME64bus applications) are 4 HP wide.

There are groove widths of 2 mm and 2.5 mm.

The guide rails are clipped into the rectangular cut-outs of the horizontal rails. They can additionally be bolted to the horizontal rail (type H only) for higher shock and vibration requirements.

The printed HP markings on the horizontal rail (28 HP and above) allow the rails to be fitted in the correct position easily (position of sub-assembly = "number in viewing window" or in front of the arrow marking on the guide rails).

Applications for guide rails

06102001

For plug-in units and frame-type plug-in units (with front panels) (standard type)

06102002

06102005

For plug-in units and frame type plug-in units or for PCBs without their own front panel (accessory type or robust version)

06106001

For CompactPCI or VME64x plug-in units (type IEEE with coding; frame-type plug-in units cannot be fitted)

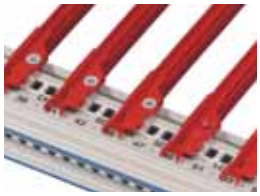

06104009

For plug-in drive unit modules or PCBs in 4.4" (111.7 mm) height (type 4.4")

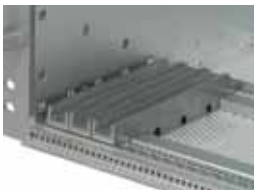

06112022

Rugged guide rails to accommodate conduction cooled assembly (CCA) adaptor

Accessories:
- ESD clip
- Keying/coding pegs
- Board locking

Part number in bold face type: ready for despatch within 2 working days
Part number in normal type: ready for despatch within 10 working days

GUIDE RAILS FOR PLUG-IN UNITS AND MODULES, ONE-PIECE, GROOVE WIDTH 2 MM AND 2.5 MM

ORDER INFORMATION

			For plug-in units and frame type plug-in units standard type		standard type, with DIN connector fixing
Assembly - can be clipped into Al extruded horizontal rails - can be clipped into 1.5 mm thick plates **Storage temperature** from -40 °C ... 130 °C			 06102001		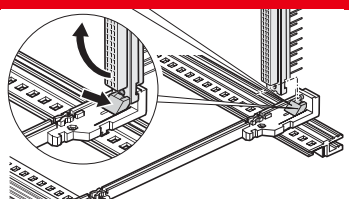 06101501
			up to 220 mm length, PBT, UL 94 V-0; from 280 mm length, multi-piece, end piece PBT, UL 94 V-0, central section Al extrusion	PBT, UL 94 V-0	PBT, UL 94 V-0, red, connector is clipped directly onto the guide rails; for euroboards only, 100 x 160 mm or 100 x 220 mm
Board length mm	Groove width mm	Colour mm	PU 10 pieces[2]	1 piece (SPQ 50)[1]	1 pair (SPQ 10)[1]
70	2	red	–	**34579-230**	–
70	2	grey	–	**34579-231**	–
160	2	red	**24560-351**	**64560-001**	**64560-074**
220	2	red	**24560-353**	**64560-002**	**64560-075**
280	2	red	**24560-379**	–	–
340	2	red	**24560-380**	–	–
160	2.5	red	–	**64560-096**	–
220	2.5	red	–	**64560-098**	–

Accessories

Retention screw, PU 100 pieces; Torque max. 0.2 Nm 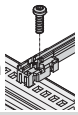	**24560-141**	–	**24560-141**
ESD clip, PU 50 pieces	**24560-255**		**24560-255**

1) SPQ (standard pack quantity): Part number includes 1 piece, but delivery is exclusively made in standard pack quantity (SPQ); please order at least the SPQ quantity or a multiple

2) Part no. includes one packing unit (PU); delivery is exclusively made in PU

Description of accessories see from page 6.43

Subracks – EuropacPRO

GUIDE RAILS TYPE "ACCESSORY", ONE-PIECE, GROOVE WIDTH 2 MM AND 2.5 MM

ORDER INFORMATION

	Guide rails accessory type		"Accessories" with DIN connector mounting	accessory type, strengthened	for heavy modules, Al extrusion, silver, robust version
Assembly - can be clipped into Al extruded horizontal rails - can be clipped into 1.5 mm thick plates **Storage temperature** from -40 °C ... +130 °C	 06102002 up to 280 mm length, PBT, UL 94 V-0; > 280 mm length, multi-piece, end piece PBT, UL 94 V-0, middle section Al extrusion		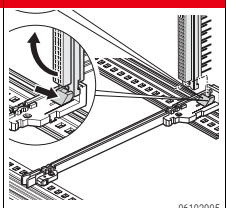 06102005 PBT, UL 94 V-0, connector is bolted directly onto the guide rails, only suitable for euroboards 100 x 160 mm or 100 x 220 mm	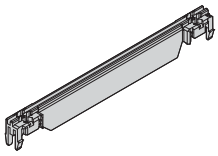 06102005 PBT UL 94 V-0, red; support beam of guide rails adds to strengthening	 06102005 Al extrusion; is screwed to horizontal rail "heavy" with retention screws
Board length mm / Groove width mm / Colour	PU 10 pieces[2]	1 piece (SPQ 50)	PU 10 pairs[2]	1 piece (SPQ 50)	1 piece (SPQ 10)[1]
100 / 2 / red	–	**64560-082**	–	–	–
160 / 2 / red	**24560-373**	**64560-005**	24560-274	**64560-076**	–
160 / 2 / grey/silver	–	**64560-055**	24560-276	–	**34562-881**
220 / 2 / red	**24560-374**	**64560-006**	24560-275	**64560-078**	–
220 / 2 / grey/silver	–	**64560-166**	24560-277	–	**34562-882**
280 / 2 / red/silver	**24560-375**	–	–	**64560-080**	**34562-883**
340 / 2 / red/silver	**24560-376**	–	–	–	**34562-884**
400 / 2 / red/silver	–	–	–	–	**34562-885**
160 / 2.5 / silver	–	–	–	–	**34564-881**
220 / 2.5 / silver	–	–	–	–	**34564-882**
280 / 2.5 / silver	–	–	–	–	**34564-883**
340 / 2.5 / silver	–	–	–	–	**34564-884**
400 / 2.5 / silver	–	–	–	–	**34564-885**

Accessories

Retention screw, PU 100 pieces; torque max. 0.2 Nm 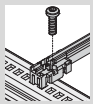	**24560-141**	**24560-141**	**24560-141**	**24560-141**	**24560-157**
ESD clip, PU 50 pieces	**24560-255**	**24560-255**	**24560-255**	**24560-255**	–
Board locking C, red, PU 10 pieces	**24560-377**	**24560-377**	**24560-377**	**24560-377**	–
Board handle C, red, PU 10 pieces	**24560-378**	**24560-378**	**24560-378**	**24560-378**	–
Identification strips for board handle, red, PU 1 sheet = 438 pieces	**60817-228**	**60817-228**	**60817-228**	**60817-228**	–
Coding see page	6.43				–

1) SPQ (standard pack quantity): Part number includes 1 piece, but delivery is exclusively made in standard pack quantity (SPQ); please order at least the SPQ quantity or a multiple

2) Part no. includes one packing unit (PU); delivery is exclusively made in PU

Description of accessories see from page 6.43

Subracks – EuropacPRO

GUIDE RAILS FOR COMPACTPCI, VME64X WITH CODING, 4.4" PCBS, GROOVE WIDTH 2 MM AND 2.5 MM

ORDER INFORMATION

			For CompactPCI, VME64x with coding In accordance with IEEE 1101.10 and IEC 60297-3-103		Offset 0.1" for power supply units in accordance with IEEE 1101.10 and IEC 60297-3-103		For 4.4" PCBs	
Assembly - can be clipped into Al extruded horizontal rails - can be clipped into1.5 mm thick plates **Storage temperature** from -40 °C ... 130 °C			06106001	04611009	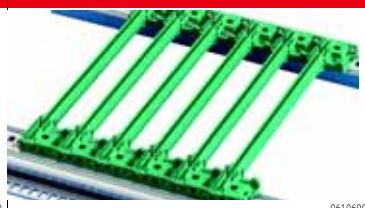 06106002		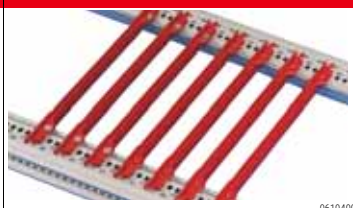 06104009	
			One-piece for groove width 2 mm, PBT, UL 94 V-0; multi-piece at groove width 2,5 mm, end-piece PBT, UL 94 V-0, center piece Al profile	PBT, UL 94 V-0	PBT, UL 94 V-0, for installation of power supplies in CompactPCI systems or plug-in units with SMD placement		One-piece, PBT, UL 94 V-0; for 4.4" PCBs or drive unit modules	
Board length mm	Groove width mm	Colour mm	PU 10 pieces	1 piece (SPQ 50)[1]	PU 10 pieces	1 piece (SPQ 50)[1]	PU 10 pieces	1 piece (SPQ 50)[1]
70	2	red	**24560-355**	**64560-085**	–	–	–	–
70	2	grey	**24560-360**	**64560-086**	–	–	–	–
160	2	red	**24560-356**	**64560-089**	–	–	**24560-361**	**64560-143**
160	2	grey	**24560-358**	**64560-090**	–	–	–	–
160	2	green	–	–	**24560-359**	**64560-071**	–	–
220	2	red	–	**64560-091**	–	–	**24560-362**	**64560-144**
220	2	grey	–	**64560-092**	–	–	–	–
220	2	green	–	–	–	**64560-072**	–	–
160	2.5	red	–	–	–	–	–	**64560-145**
220	2.5	red	**24561-330**	–	–	–	–	**64560-146**
220	2.5	grey	**24561-340**	–	–	–	–	–
280	2.5	red	**24561-331**	–	–	–	–	–
280	2.5	grey	**24561-341**	–	–	–	–	–
340	2.5	red	**24561-332**	–	–	–	–	–
340	2.5	grey	**24561-342**	–	–	–	–	–

Accessories

ESD clip, PU 50 pieces	**24560-255**	**24560-255**	–	–	–	–
ESD clips, for alignment pin, PU 50 pieces	**24560-256**	**24560-256**	**24560-256**	**24560-256**	–	–
Retention screw, PU 100 pieces; torque max. 0.2 Nm	**24560-141**	**24560-141**	**24560-141**	**24560-141**	**24560-158**	**24560-158**
Coding peg, PU 100 pieces	**20817-501**	**20817-501**	**20817-501**	**20817-501**	–	–

1) SPQ (standard pack quantity): Part number includes 1 piece, but delivery is exclusively made in standard pack quantity (SPQ); please order at least the SPQ quantity or a multiple

2) Part no. includes one packing unit (PU); delivery is exclusively made in PU

Description of accessories see from page 6.43

Subracks – EuropacPRO

GUIDE RAILS, MULTI-PIECE, GROOVE WIDTH 2 MM

ORDER INFORMATION

			For plug-in units and modules standard type		Accessories type		For 4.4" PCBs	
PCBs: Fixed lengths for 160, 220, 280, 340 mm; length 1000 mm for special dimensions **Mounting:** pluggable into horizontal rails **Storage temperature** : End piece -40°C ... +130°C PVC profile 0°C ... +60°C			 06106004 end piece, PBT, UL 94 V-0, middle section Al extrusion	end piece, PBT, UL 94 V-0, middle section plastic extrusion (PVC, RAL 7035)	 06106005 end piece, PBT, UL 94 V-0, middle section Al extrusion	end piece, PBT, UL 94 V-0, middle section plastic extrusion (PVC, RAL 7035)	 06106006 end piece, PBT, UL 94 V-0, middle section Al extrusion	end piece, PBT, UL 94 V-0, middle section plastic extrusion (PVC, RAL 7035)
Description	Length mm	Groove width mm	1 piece (SPQ 10)[1]	1 piece (SPQ 10)[1]	1 piece (SPQ 10)[1]	1 piece (SPQ 10)[1]	1 piece (SPQ 10)[1]	1 piece (SPQ 10)[1]
End piece, red, 1 pair		2	**64560-004**	**64560-004**	**64560-008**	**64560-008**	**64560-057**	**64560-057**
Al extrusion, for 160 mm board length	95	2	**34560-891**	**34564-891**	**34560-891**	**34564-891**	**34560-891**	**34564-891**
Al extrusion, for 220 mm board length	155	2	**34560-892**	**34564-892**	**34560-892**	**34564-892**	**34560-892**	**34564-892**
Al extrusion, for 280 mm board length	215	2	**34560-893**	**34564-893**	**34560-893**	**34564-893**	**34560-893**	**34564-893**
Al extrusion, for 340 mm board length	275	2	**34560-894**	–	**34560-894**	–	**34560-894**	–
Al extrusion, for any board length	1000	2	**34560-900**	–	**34560-900**	–	**34560-900**	–
Plastic extrusion, for any board length	1000	2	–	**34564-900**	–	**34564-900**	–	**34564-900**

Accessories

ESD clip, PU 50 pieces	**24560-255**	**24560-255**	**24560-255**	**24560-255**	–	–
Retention screw, PU 100 pieces; torque max. 0.2 Nm	**24560-141**	**24560-141**	**24560-141**	**24560-141**	**24560-158**	**24560-158**
Board locking C, red, PU 10 pieces	–	–	**24560-377**	**24560-377**	–	–
Board handle C, red, PU 10 pieces	–	–	**24560-378**	**24560-378**	–	–
Identification strips for board handle, red, PU 1 sheet = 438 pieces	–	–	**60817-228**	**60817-228**	–	–
Coding see page	–	–	see page 6.43		–	–

1) SPQ (standard pack quantity): Part number includes 1 piece, but delivery is exclusively made in standard pack quantity (SPQ); please order at least the SPQ quantity or a multiple

2) Part no. includes one packing unit (PU); delivery is exclusively made in PU

Description of accessories see from page 6.43

NOTE

- Strengthening for middle section (plastic extrusion) available on request

Subracks – EuropacPRO

DIMENSION DRAWINGS OF GUIDE RAILS

Standard

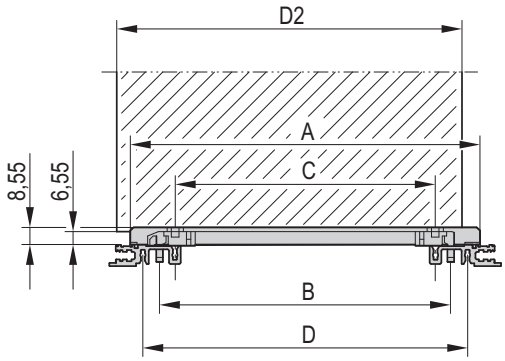

bza45808

Robust version

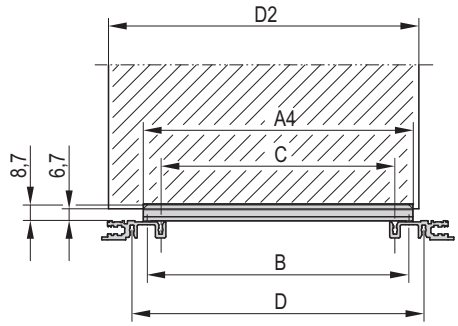

06105074

For accessories

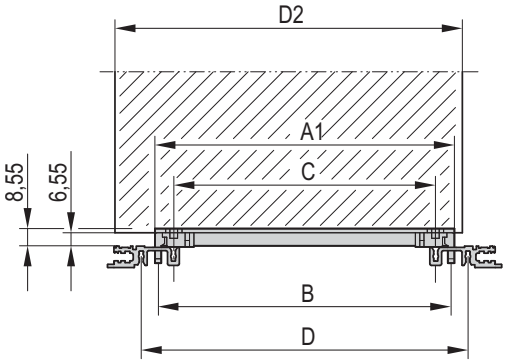

bza45808

For accessories, strengthened

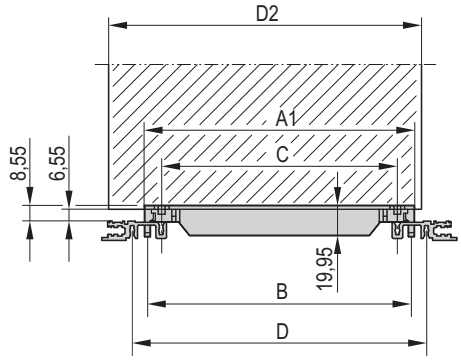

bza46552

CompactPCI, VME64x

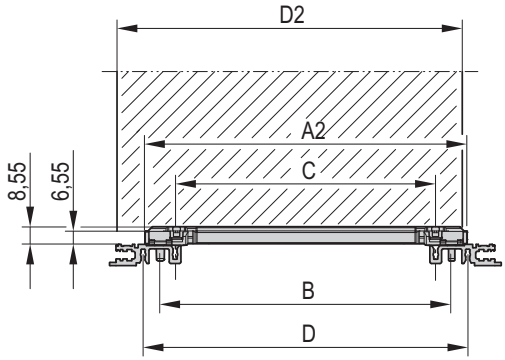

06105068

4.4" (111.7 mm)

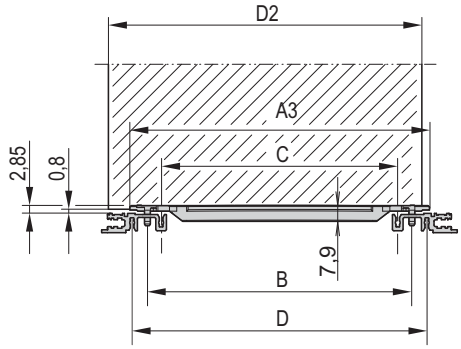

06105069

Dimensions table

Board length					Dimensions			
L	A	A1	A2	A3	A4	B	C	D
mm	mm	mm	mm	mm	mm	mm	mm	mm
70	71.5	47.9	59.39	63	49	45	30	60
100	101.5	77.9	89.39	93	79	75	60	90
160	161.5	137.9	149.39	153	139	135	120	150
220	221.5	197.9	209.39	213	199	195	180	210
280	281.5	257.9	269.39	273	259	255	240	270
340	341.5	317.9	322.39	333	319	315	300	330
400	401.5	377.9	389.39	393	379	375	360	390

A, A1, A2, A3, A4: Length of rail
B: Pitch of snap-in fixing
C: Pitch of guide rail retention screws
D: Pitch of horizontal rail retention screws

Subracks – EuropacPRO

GUIDE RAIL ACCESSORIES

ORDER INFORMATION

		ESD clips, CompactPCI/VME 64 alignment pin for guide rails	Coding for subracks	
			Keying/coding block for guide rails accessory type	Keying/coding for CompactPCI, VME64x handles to IEEE 1011.10 and IEC 60297-3-103
		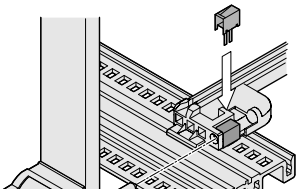 06103052	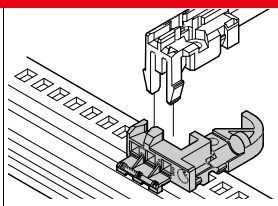 06103051	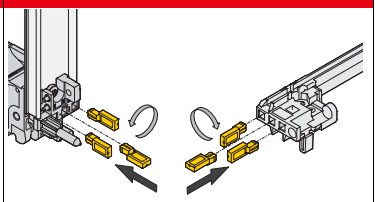 04612052
		Spring steel, tin-plated, ESD clip, for alignment pin in accordance with IEEE; can be plugged into the guide rails with coding and into the keying/coding block; provides conductive contact between the alignment pin of the insertion/extractor handle (IEL or IET handle) and the horizontal rail	PBT, UL 94 V-0, keying/coding block is clipped into the horizontal rail next to the guide rail; please order keying/coding pegs separately	Keying/coding peg, PBTP, UL 94 V-0, RAL 7035 The keying/coding pegs prevent plug-in units to be mounted in wrong slots. They are inserted in the chambers of the codable card guides as well as in the insertion/extractor handles IEL or IET (4 possible positions), resulting in 64 codings per card guide; when coding the upper and lower card guide, 4096 codings will result;
Assembly	Colour	PU 50 pieces	1 piece (SPQ 50)	PU 100 pieces
above	red	–	**34579-232**	–
	grey	–	**34579-233**	**20817-501**
	silver	**24560-256**	–	–
below	red	–	**34579-234**	–
	grey	–	**34579-235**	**20817-501**
	silver	**24560-256**	–	–

1) SPQ (standard pack quantity): Part number includes 1 piece, but delivery is exclusively made in standard pack quantity (SPQ); please order at least the SPQ quantity or a multiple

2) Part no. includes one packing unit (PU); delivery is exclusively made in PU

GUIDE RAIL ACCESSORIES

ORDER INFORMATION

	ESD clips for guide rails	Board locking C for PCBs without front panel; for accessory type guide rails	PCB handle C for board locking; for accessory type guide rails	Identification strips
	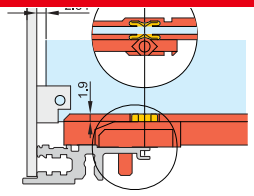 04503050	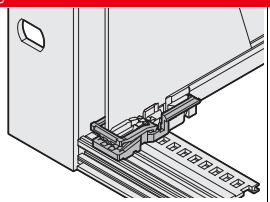 04805050	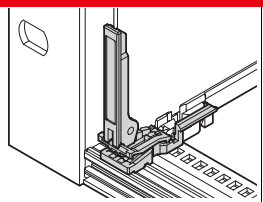 04805051	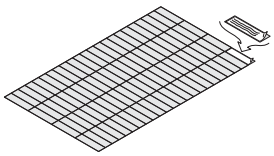 06108076
	Spring steel, tin-plated, provides conductive contact between board and horizontal rail, on both the solder side and the component side	PBT, UL 94 V-0, red, to fix the PCB in the subrack (also slot 1), can also be used without board handle, minimum distance 3 HP	PBT, UL 94 V-0, red, insertion/extraction function with connection to board locking (also slot 1), mounting directly behind front panel (above and below), minimum distance 3 HP	Polyester film, 31 x 4 mm, self-adhesive, white/matt (1 A4 sheet contains 438 pieces)
Assembly Colour mm	silver PU 50 pieces	red PU 10 pieces	red PU 10 pieces	white/matt 1 piece
above/below	**24560-255**	**24560-377**	**24560-378**	**60817-228**

Part number in bold face type: ready for despatch within 2 working days
Part number in normal type: ready for despatch within 10 working days

SHIELDING FOR TOP AND BOTTOM

Cover plates can be used for electromagnetic shielding (with EMC contact springs) or as mechanical protection (without EMC springs)

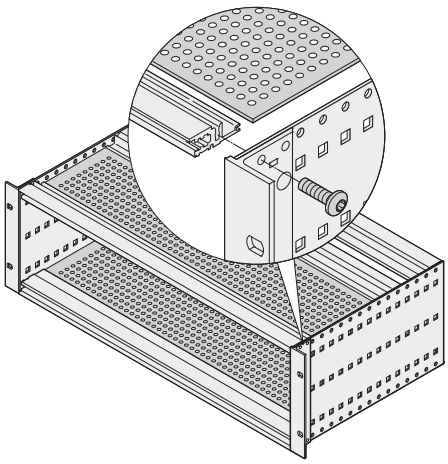

06108077

Cover plates for mechanical protection

- Cover plates are inserted into the grooves of the front and rear horizontal rails, type L "light"

see page 6.45

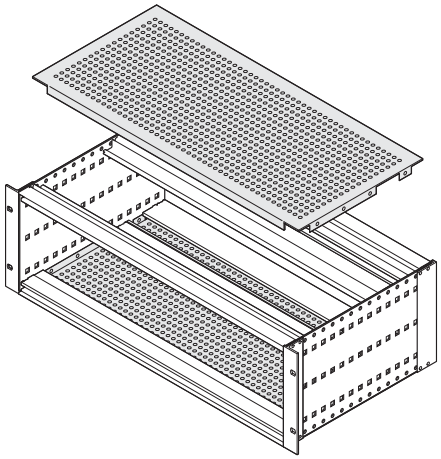

06102084

Cover plates with EMC shielding and mechanical protection

EMC cover plates for top and bottom

- Inserted in the groove of the front and rear horizontal rails; shielding with contact springs, lateral contact by bolting the bracket to the side panel
- Used when standard-depth PCBs (160, 220, 280, ...) are fitted

see page 6.46

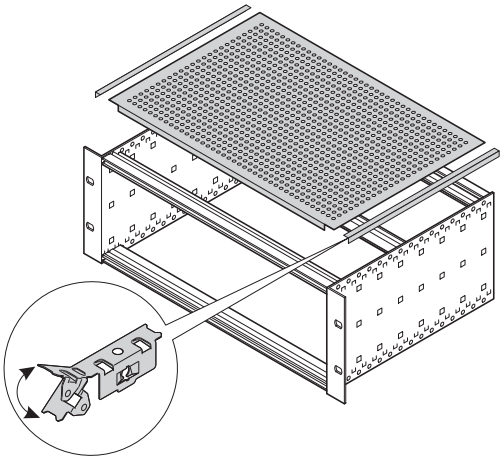

06105082

Universal EMC cover plates for top and bottom

- Inserted in the groove of the front and rear horizontal rails; shielding with contact springs, lateral contact by bolting to the side panel with special contact springs
- Used when PCBs with special dimensions are fitted

see page 6.47

COVER PLATES FOR MECHANICAL PROTECTION (INSERTION INTO HORIZONTAL RAIL TYPE L)

ORDER INFORMATION

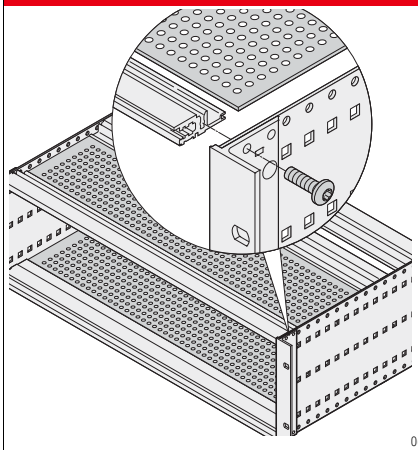

Cover plates
for insertion into
horizontal rail type L

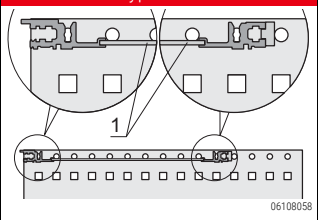

Perforated Al plate, 1.2 mm,
hole diameter 3.8 mm,
Al, untreated,
perforation degree 60 %;
for insertion into the groove of the
light horizontal rails (type L)

Width HP	Depth mm	Application	PU 1 pair
42	175	160 mm board depth	**24561-031**
63	175	160 mm board depth	**24561-041**
84	175	160 mm board depth	**24561-051**
84	235	220 mm board depth	**24561-052**

NOTE

- Other dimensions on request

Part number in bold face type: ready for despatch within 2 working days
Part number in normal type: ready for despatch within 10 working days

EMC COVER PLATES AND MECHANICAL PROTECTION

- Cover plate for bolting to side panel
- Used when standard-depth PCBs (160, 220, 280, ...) are fitted

ORDER INFORMATION

			Cover plate for bolting to side panel	Stainless steel EMC gasket, between cover plate and horizontal rail	
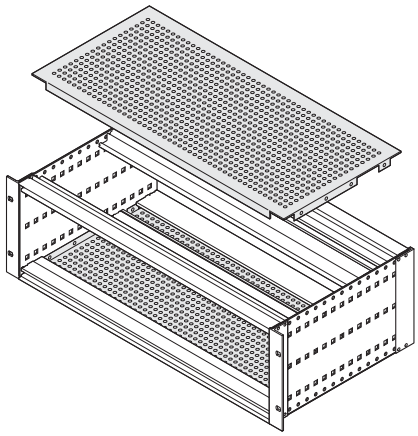 06197010			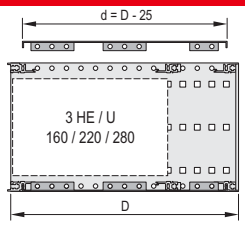 06102082 Al, 1.0 mm, hole diameter 4.0 mm, passivated, perforation degree 58 %, incl. fixing screws; for shielding 4 stainless steel EMC gaskets are required per subrack	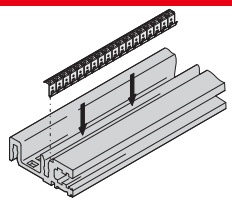 06106052 stainless steel EMC gasket, clips into the horizontal rail and forms the contact with the cover plate; suitable for all horizontal rails	
Width HP	Depth mm	Application	PU 1 pair	PU 10 pieces	PU 100 pieces
42	175	160 mm board depth	**24560-064**	**24560-241**	–
42	235	160, 220 mm board depth	**24560-065**		
42	275	160, 220 mm board depth CompactPCI (275 mm)	**24560-061**		
42	277.75	160, 220 mm board depth VME64x (277.75 mm)	**24579-090**		
42	295	160, 220, 280 mm board depth	**24560-066**		
63	175	160 mm board depth	**24560-071**	**24560-243**	–
63	235	160, 220 mm board depth	**24560-072**		
63	275	160, 220 mm board depth CompactPCI (275 mm)	**24560-062**		
63	295	160, 220, 280 mm board depth	**24560-073**		
84	175	160 mm board depth	**24560-078**	**24560-245**	**24560-246**
84	235	160, 220 mm board depth	**24560-079**		
84	275	160, 220 mm board depth CompactPCI (275 mm)	**24560-063**		
84	277.75	160, 220 mm board depth VME64x (277.75 mm)	**24579-092**		
84	295	160, 220, 280 mm board depth	**24560-080**		
84	355	160, 220, 280 mm board depth	**24560-081**		
84	415	160, 220, 280 mm board depth	**24560-082**		
84	475	160, 220, 280 mm board depth	**24560-083**		
Assembly tool, for EMC gasket, stainless steel (horizontal rails), 1 piece 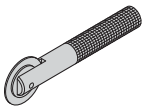			–	**24560-271**	

NOTE

- Cover plates without perforation available on request

UNIVERSAL EMC COVER PLATES AND MECHANICAL PROTECTION

- Used when PCBs with special dimensions are fitted

ORDER INFORMATION

	Universal cover plate	Stainless steel EMC gasket, between cover plate and horizontal rail
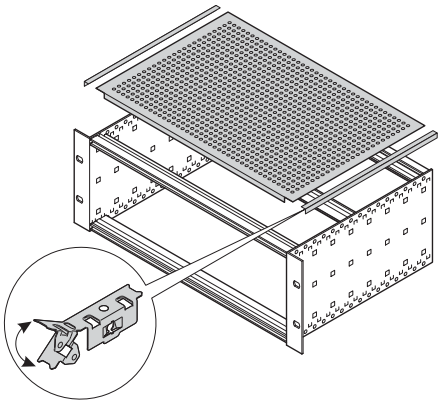 06105082	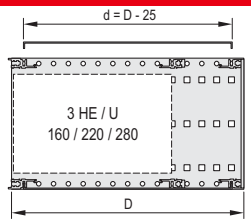 06108079 Al, 1.0 mm, hole diameter 4.0 mm, passivated, perforation degree 58 %, incl. lateral EMC sealing, incl. fixing screws	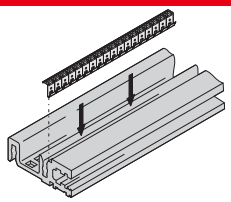 06106052 stainless steel EMC gasket, clips into the horizontal rail and forms the contact with the cover plate; suitable for all horizontal rails

Width HP	Depth mm	Application	PU 1 pair	PU 10 pieces	PU 100 pieces
42	175	160 mm board depth	**24560-031**	**24560-241**	–
42	235	160, 220 mm board depth	**24560-032**		
42	295	160, 220, 280 mm board depth	**24560-033**		
63	175	160 mm board depth	**24560-041**	**24560-243**	–
63	235	160, 220 mm board depth	**24560-042**		
63	295	160, 220, 280 mm board depth	**24560-043**		
84	175	160 mm board depth	**24560-051**	**24560-245**	**24560-246**
84	235	160, 220 mm board depth	**24560-052**		
84	295	160, 220, 280 mm board depth	**24560-053**		
84	355	160, 220, 280 mm board depth	**24560-054**		
84	415	160, 220, 280 mm board depth	**24560-055**		
84	475	160, 220, 280 mm board depth	**24560-056**		
Assembly tool, for EMC gasket, stainless steel (horizontal rails), 1 piece 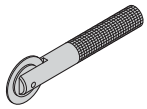			–	**24560-271**	

Part number in bold face type: ready for despatch within 2 working days
Part number in normal type: ready for despatch within 10 working days

COVER/SHIELDING TO FRONT AND REAR

- The front and rear sides of the subrack can be shielded by a hinged front panel or by a fixed front panel and 19" brackets
- The rear can be shielded with a front panel and a corner profile

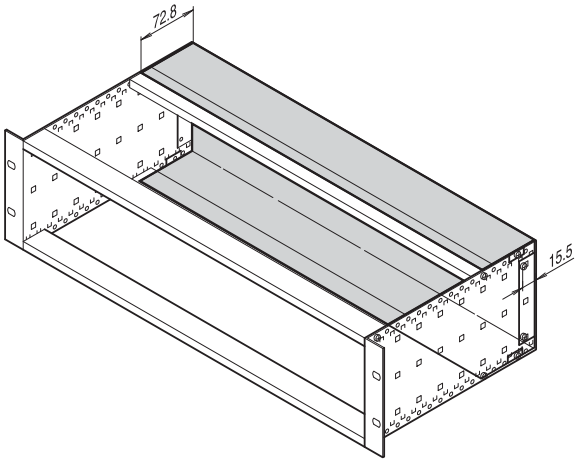

BZA45814

Rear hood

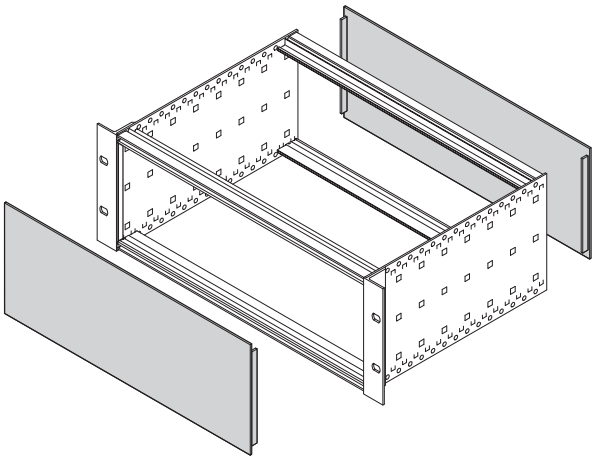

06112089

Front panel for front and rear

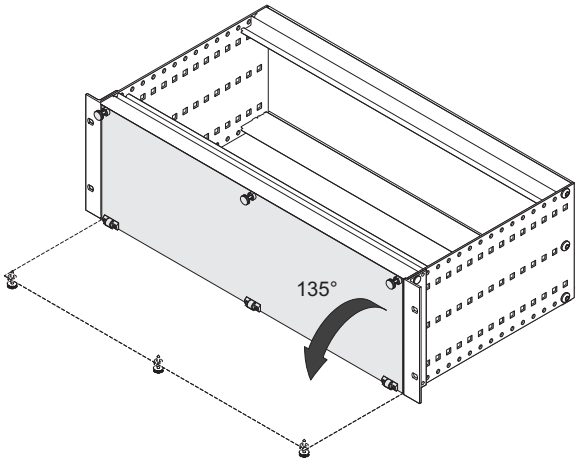

06112090

Front panel, hinged/pivoted

Subracks – EuropacPRO

REAR HOOD FOR 3 U AND 6 U SUBRACKS (FOR STAINLESS STEEL EMC GASKET)

ORDER INFORMATION

		Rear hood	Stainless steel EMC gasket, between cover plate and horizontal rail	
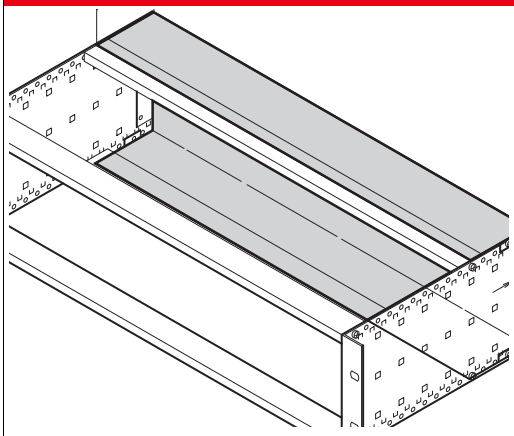 bza45814		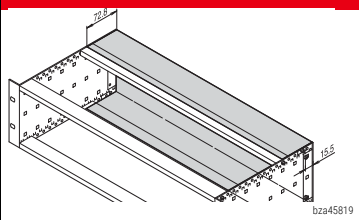 bza45819 Al, 1 mm, clear passivated; 60 mm additional side panel depth required (board depth + 60 mm); for shielding please order EMC gasket for horizontal rail separately; cannot be used simultaneously with rear corner profile	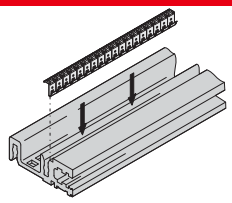 06106052 stainless steel EMC gasket, clips into the horizontal rail and forms the contact with the cover plate; suitable for all horizontal rails	
Height U	Width HP	1 piece	PU 10 pieces	PU 100 pieces
3	42	**34561-750**	**24560-241**	–
3	84	**34561-752**	**24560-245**	**24560-246**
6	63	**34561-763**	**24560-243**	–
6	84	**34561-764**	**24560-245**	**24560-246**
Torx panhead screw, M4 × 6, St, zinc-plated, PU 100 pieces		**24560-135**	–	
Assembly tool, for EMC gasket, stainless steel (horizontal rails), 1 piece 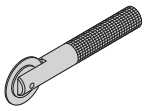		–	**24560-271**	

NOTE

- Other dimensions of rear hood available on request

Subracks – EuropacPRO

FRONT/REAR PANELS, UNSHIELDED

ORDER INFORMATION

			Front panel					
			pre-anodised, cut edges plain		anodised		Front anodised, rear iridescent green chromated	
04292001			Al, 2.5 mm		Al, 2.5 mm		Al, 2.5 mm	
Height U	Height mm	Width HP	1 piece	1 piece (SPQ 5)[1]	1 piece	1 piece (SPQ 5)[1]	1 piece	1 piece (SPQ 5)[1]
1	44.45	28	–	–	–	–	**20850-423**	–
1	44.45	42	–	–	–	–	**20850-424**	–
1	44.45	63	–	–	–	–	**20850-425**	–
1	44.45	84	–	–	–	–	**20850-426**	–
2	84.0	84	**30818-271**	–	**30807-416**	–	**30847-461**	–
3	128.4	2	–	**30810-433**	–	**30810-432**	–	**30847-470**
3	128.4	3	–	**30818-272**	–	**30807-508**	–	**30847-471**
3	128.4	4	–	**30818-273**	–	**30807-481**	–	**30838-043**
3	128.4	5	–	**30818-274**	–	**30807-510**	–	**30838-044**
3	128.4	6	–	**30818-275**	–	**30807-482**	–	**30838-045**
3	128.4	7	–	**30818-276**	–	**30807-509**	–	**30838-046**
3	128.4	8	–	**30818-277**	–	**30807-484**	–	**30838-047**
3	128.4	10	–	**30818-279**	–	**30807-483**	–	**30838-049**
3	128.4	12	–	**30818-281**	–	**30807-485**	–	**30838-051**
3	128.4	14	–	**30818-282**	–	**30807-501**	–	**30838-053**
3	128.4	21	–	**30818-289**	–	**30807-487**	–	**30838-060**
3	128.4	28	–	**30818-296**	–	**30807-496**	–	**30838-067**
3	128.4	42	**30818-310**	–	**30807-494**	–	**30838-081**	–
3	128.4	63	**30818-331**	–	**30808-067**	–	**30838-102**	–
3	128.4	84	**30818-352**	–	**30807-506**	–	**30838-123**	–
4	172.9	42	–	–	–	–	**30847-463**	–
4	172.9	63	–	–	–	–	**30847-464**	–
4	172.9	84	**30818-434**	–	**30807-596**	–	**30847-465**	–
6	261.8	2	–	**30818-747**	–	**30818-741**	–	**30847-472**
6	261.8	4	–	**30818-518**	–	–	–	**30838-124**
6	261.8	5	–	–	–	–	–	**30838-125**
6	261.8	6	–	–	–	–	–	**30838-126**
6	261.8	7	–	–	–	–	–	**30838-127**
6	261.8	8	–	**30818-522**	–	–	–	**30838-128**
6	261.8	10	–	**30818-524**	–	**30807-753**	–	**30838-130**
6	261.8	12	–	**30818-526**	–	–	–	**30838-132**
6	261.8	14	–	**30818-528**	–	**30807-758**	–	**30838-134**
6	261.8	16	–	**30818-530**	–	–	–	**30838-136**
6	261.8	21	–	**30818-535**	–	**30807-757**	–	**30838-141**
6	261.8	28	–	**30818-542**	–	**30807-766**	–	**30838-148**
6	261.8	42	**30818-556**	–	**30807-764**	–	**30838-162**	–
6	261.8	63	**30818-577**	–	**30807-771**	–	**30838-183**	–
6	261.8	84	**30818-598**	–	**30807-776**	–	**30838-204**	–
9	395.1	4	–	–	–	–	–	**30847-476**
9	395.1	8	–	–	–	–	–	**30847-480**
9	395.1	10	–	–	–	–	–	**30847-482**
9	395.1	12	–	–	–	–	–	**30847-484**
9	395.1	84	–	–	–	–	**30847-556**	–

•Front panel assembly kits, sleeves, collar screws, quick-release fasteners see page 6.65

1) SPQ (standard pack quantity): Part number includes 1 piece, but delivery is exclusively made in standard pack quantity (SPQ); please order at least the SPQ quantity or a multiple

Subracks – EuropacPRO

FRONT/REAR PANELS SHIELDABLE WITH STAINLESS STEEL EMC GASKET

ORDER INFORMATION

			Front panel			
			Front panel for shielding with EMC gasket (stainless steel)		Stainless steel EMC gasket	
04292001			Al, 2.5 mm, front anodized, rear iridescent green chromated, 2 alignment pins pressed-in, St, stainless		inserted laterally into the grooves of the front panel, suited for temperatures above 70 °C	
Height U	Height mm	Width HP	1 piece	1 piece (SPQ 5)[1]	PU 10 pieces	PU 100 pieces
2	84	84	**30846-588**	–	**21101-775**	**21101-776**
3	128.4	2	–	**30846-864**	**21101-705**	**21101-706**
3	128.4	3	–	**20846-425**		
3	128.4	4	–	**20846-426**		
3	128.4	5	–	**20846-427**		
3	128.4	6	–	**20846-428**		
3	128.4	7	–	**20846-429**		
3	128.4	8	–	**20846-430**		
3	128.4	10	–	**20846-431**		
3	128.4	12	–	**20846-432**		
3	128.4	14	–	**20846-433**		
3	128.4	21	–	**20846-434**		
3	128.4	28	–	**20846-436**		
3	128.4	42	**20846-437**	–		
3	128.4	63	**20846-438**	–		
3	128.4	84	**30846-676**	–		
4	172.9	42	**30846-681**	–	**21101-713**	**21101-714**
4	172.9	63	**30846-682**	–		
4	172.9	84	**30846-683**	–		
6	261.8	2	–	**30846-865**	**21101-707**	**21101-708**
6	261.8	4	–	**20846-443**		
6	261.8	5	–	**20846-444**		
6	261.8	6	–	**20846-445**		
6	261.8	7	–	**20846-446**		
6	261.8	8	–	**20846-447**		
6	261.8	10	–	**20846-448**		
6	261.8	12	–	**20846-449**		
6	261.8	14	–	**20846-450**		
6	261.8	16	–	**20846-456**		
6	261.8	21	–	**20846-451**		
6	261.8	28	–	**20846-452**		
6	261.8	42	**20846-453**	–		
6	261.8	63	**20846-454**	–		
6	261.8	84	**30846-771**	–		
9	395.1	84	**30846-859**	–	**21101-709**	**21101-710**
Assembly tool, for stainless steel EMC gasket					**24560-270**	

•Front panel assembly kits, sleeves, collar screws, quick-release fasteners see page 6.65

1) SPQ (standard pack quantity): Part number includes 1 piece, but delivery is exclusively made in standard pack quantity (SPQ); please order at least the SPQ quantity or a multiple

Part number in bold face type: ready for despatch within 2 working days
Part number in normal type: ready for despatch within 10 working days

FRONT/REAR PANELS SHIELDABLE WITH TEXTILE EMC GASKET

ORDER INFORMATION

			Front panel			
			Front panel for shielding with EMC sealing (textile)		Textile EMC gasket	
04292001			Al extrusion, 2.5 mm, front anodised,rear conductive; 3, 6 U with alignment pin (not 84 HP)		textile gasket, core: foam, sleeve: textile cladding with CuNi coating, UL 94 V-0	
Height U	Height mm	Width HP	1 piece	1 piece (SPQ 5)[1]	PU 10 pieces	PU 100 pieces
2	84	84	**20848-262**	–	–	**21101-856**
3	128.4	2	–	**30849-001**	**21101-853**	**21101-854**
3	128.4	3	–	**30849-004**		
3	128.4	4	–	**30848-354**		
3	128.4	5	–	**30848-378**		
3	128.4	6	–	**30848-380**		
3	128.4	7	–	**30848-382**		
3	128.4	8	–	**30848-356**		
3	128.4	10	–	**30848-386**		
3	128.4	12	–	**30848-358**		
3	128.4	14	–	**20848-013**		
3	128.4	21	–	**20848-020**		
3	128.4	28	–	**20848-027**		
3	128.4	42	**20848-047**	–		
3	128.4	63	**20848-068**	–		
3	128.4	84	**20848-097**	–		
4	172.9	28	–	**20848-268**	**21101-858**	–
4	172.9	42	**20848-269**	–		
4	172.9	63	**20848-270**	–		
4	172.9	84	**20848-271**	–		
6	261.8	2	–	**30849-002**	**21101-855**	**21101-856**
6	261.8	4	–	**30848-355**		
6	261.8	5	–	**30848-379**		
6	261.8	6	–	**30848-381**		
6	261.8	7	–	**30848-383**		
6	261.8	8	–	**30848-357**		
6	261.8	10	–	**30848-387**		
6	261.8	12	–	**30848-359**		
6	261.8	14	–	**20848-106**		
6	261.8	16	–	**20848-108**		
6	261.8	21	–	**20848-113**		
6	261.8	28	–	**20848-120**		
6	261.8	42	**20848-139**	–		
6	261.8	63	**20848-160**	–		
6	261.8	84	**20848-189**	–		
9	395.1	84	**20848-280**	–	**21101-859**	**21101-904**

•Front panel assembly kits, sleeves, collar screws, quick-release fasteners see page 6.65

1) SPQ (standard pack quantity): Part number includes 1 piece, but delivery is exclusively made in standard pack quantity (SPQ); please order at least the SPQ quantity or a multiple

Subracks – EuropacPRO

FRONT PANELS, HINGED AND PIVOTED

ORDER INFORMATION

		Front panel, bottom-hinged		Front panel, pivoted
		shielded	unshielded	
		04295001		04295002
		Al, 2.5 mm, front anodised, rear iridescent green chromated; hinge, Zn die-cast, nickel-plated; 2 x sleeve, PA; 2 x knurled screws	Al, 2.5 mm, anodised, cut edges plain; hinge, Zn die-cast, nickel-plated; 2 x sleeve, PA; 2 knurled screws M2.5 x 12.3, St, nickel-plated	Al, 2.5 mm, front anodised, rear iridescent green chromated; hinge, die-cast zinc, chrome-plated; textile EMC gasket
Height U	Width HP	1 piece	1 piece	1 piece
3	28	**20848-608**	**20838-280**	–
3	42	**20848-599**	**20838-271**	–
3	63	**20848-600**	**20838-272**	–
3	84	**20848-601**	**20838-273**	**20848-611**
4	42	**20848-605**	**20838-277**	–
4	63	**20848-606**	**20838-278**	–
4	84	**20848-607**	**20838-279**	–
6	28	**20848-696**	–	–
6	42	**20848-602**	**20838-274**	–
6	63	**20848-603**	**20838-275**	–
6	84	**20848-604**	**20838-276**	**20848-617**

NOTE

- Front panel can be removed in opened position (> 135°)

Part number in bold face type: ready for despatch within 2 working days
Part number in normal type: ready for despatch within 10 working days

SHIELDING IS REQUIRED BETWEEN THE FOLLOWING COMPONENTS OF A SUBRACK

- Front panel/rear panel and horizontal rail, see page 6.55
- Front panel and 19" bracket/corner profile or in case of depth-offset installation, see page 6.55
- Cover plate/horizontal rail, see page 6.44
- Cover plate/side panel, see from page 6.44
- Horizontal rail/horizontal rail in combined mounting (3 U + 3 U and 6 U), see page 6.59
- Shielding for backplane and side panel see page 6.55

EMC shielding concepts

- Shielding concepts in accordance with IEEE and IEC
- Shielding effectiveness has been determined in various series of measurements in accordance with IEC 61587-3 and can be found online together with the relevant standard product
- The combined use of stainless steel and textile EMC gaskets is functionally possible without any problems

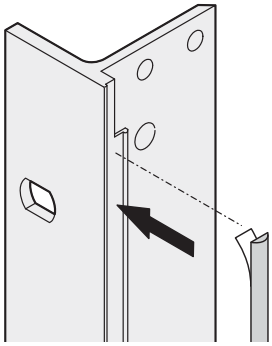

06108073

EMC shielding concept with EMC textile gaskets

- The seal is affixed to the left-hand side of the subrack (viewed from front) or to the front panel profile, respectively
- An EMC gasket with CuNi coating assures a long-term high level of shielding, typically 40 dB at 2 GHz
- Temperature-resistant adhesive layer is protected by a removable film
- Rear shielding is obtained using front panels or a rear hood
- Temperature range -40° C ... +70° C
- **Note:** rear hood and corner profile cannot be used simultaneously

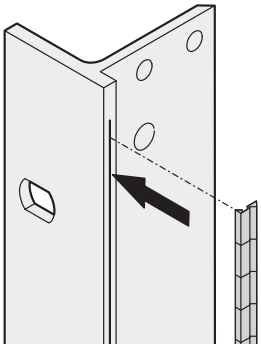

06108074

EMC shielding concept with stainless steel EMC gaskets)

- Symmetrical arrangement of EMC gaskets on the left and right hand sides of subrack and front panel
- Shielding: typically 40 dB at 2 GHz
- Can be used for temperatures above +70° C
- **Note:** rear hood and corner profile cannot be used simultaneously

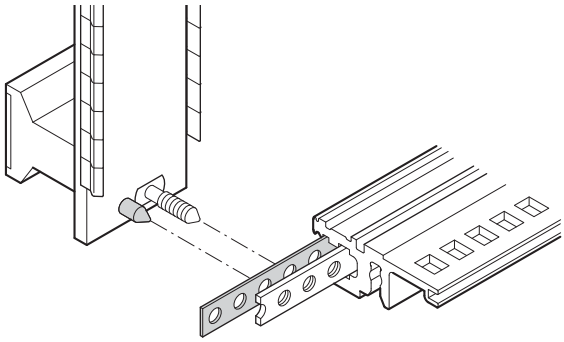

06112091

Front panel shielding concept

- Front panels are available for textile or stainless steel EMC gasket options
- Alignment pins are pressed-in in the front panel to position the gaskets securely and to compress them evenly
- An alignment pin positions the perforated strip in the horizontal rail
- Alignment pin and perforated strip provide an optimal positioning of the shielded assemblies; the front panels are not forced sideways by the shielding elements (SCHROFF patent)

EMC GASKETS BETWEEN FRONT/REAR PANEL AND HORIZONTAL RAIL

ORDER INFORMATION

		Stainless steel EMC gasket between front panel/rear panel and horizontal rail	
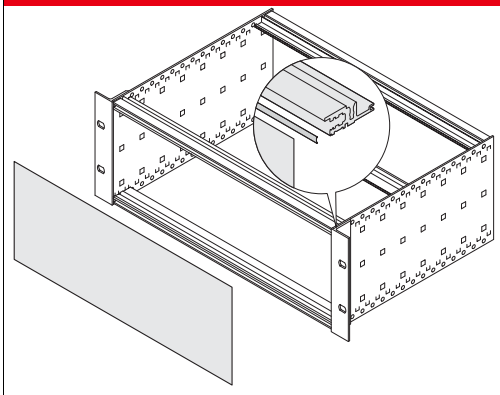 06102053		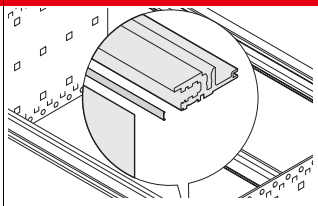 06102053 stainless steel; for front and rear horizontal rails (type VT)	
Width HP	Depth mm	PU 10 pieces	PU 100 pieces
28	131.8	**24560-229**	–
42	202.9	**24560-231**	–
63	304.5	**24560-233**	–
84	416.6	**24560-235**	**24560-236**

EMC GASKETS BETWEEN FRONT PANEL AND 19" BRACKET/CORNER PROFILE

ORDER INFORMATION

		Stainless steel EMC gasket between front panel/rear panel and 19" bracket/corner profile		Textile EMC gasket between front panel/rear panel and 19" bracket/corner profile	
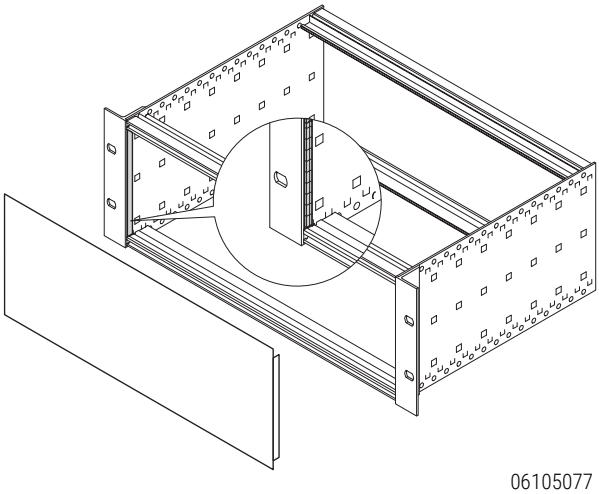 06105077		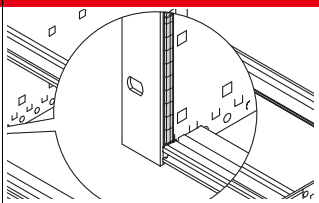 06105077 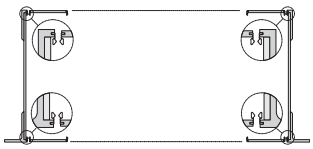 06108070 inserted laterally into the grooves of the front panel		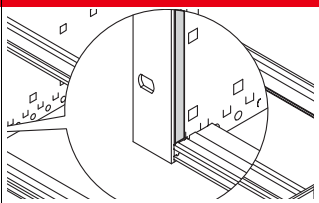 06102056 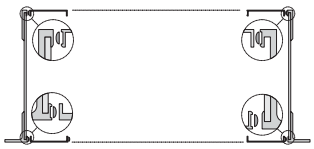 06108054 textile gasket, core: foam, sleeve: textile cladding with CuNi coating, UL 94 V-0	
Height U	Depth mm	PU 10 pieces	PU 100 pieces	PU 10 pieces	PU 100 pieces
3	97.5	**21101-705**	**21101-706**	**21101-853**	**21101-854**
4	142.5	**21101-713**	**21101-714**	**21101-858**	–
6	232.5	**21101-707**	**21101-708**	**21101-855**	**21101-856**
9	365.0	**21101-709**	**21101-710**	**21101-859**	**21101-904**
Assembly tool, for stainless steel EMC gasket 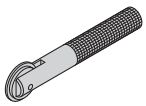		**24560-270**		–	

Part number in bold face type: ready for despatch within 2 working days
Part number in normal type: ready for despatch within 10 working days

EMC GASKETS BETWEEN HORIZONTAL RAIL AND HORIZONTAL RAIL

ORDER INFORMATION

		Stainless steel EMC gasket between horizontal rail and horizontal rail
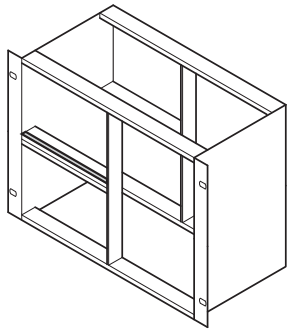 bpa46548		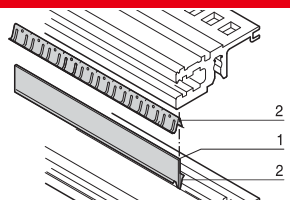 bza45877 Item 1: cover strip, Al, 1 mm, item 2: 2 x EMC seals (stainless steel); for shielding of 2 horizontal rails positioned directly one above the other if assembly area is divided vertically
Width HP	Depth mm	PU 1 kit
20	107.0	**24562-520**
28	147.0	**24562-528**
40	208.0	**24562-540**
42	218.0	**24562-542**
63	325.0	**24562-563**
84	431.0	**24562-584**

1) SPQ (standard pack quantity): Part number includes 1 piece, but delivery is exclusively made in standard pack quantity (SPQ); please order at least the SPQ quantity or a multiple

EMC GASKETS BETWEEN FRONT PANEL AND SIDE PANEL (DEPTH-OFFSET INSTALLATION)

ORDER INFORMATION

		Stainless steel EMC gasket between front panel and side panel (depth-offset installation)	Textile EMC gasket between front panel and side panel (depth-offset installation)
		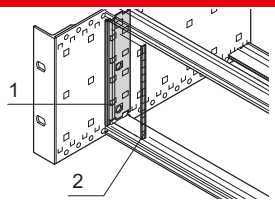 bpa45884 Item 1: 2 x support profiles, Al extrusion; item 2: 2 x stainless steel EMC gasket; fixing material kit for vertical EMC shielding between depth-offset shielded front panels and side panel	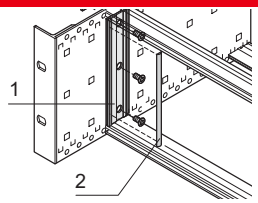 06102058 Item 1: 2 x support profiles, Al extrusion; item 2: 1 x EMC textile gasket; fixing material kit for vertical EMC shielding between depth-offset shielded front panels and side panel
Height U	Depth mm	PU 1 kit	PU 1 kit
3	97.5	**24562-199**	**24560-180**
4	142.5	24562-299	**24560-280**
6	187.5	**24562-499**	**24560-480**
Assembly tool, for stainless steel EMC gasket 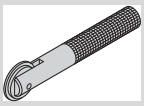		**24560-270**	–

Subracks – EuropacPRO

EMC GASKETS BETWEEN BACKPLANE AND SIDE PANEL

ORDER INFORMATION

	Stainless steel EMC gasket between backplane and side panel (depth-offset installation)
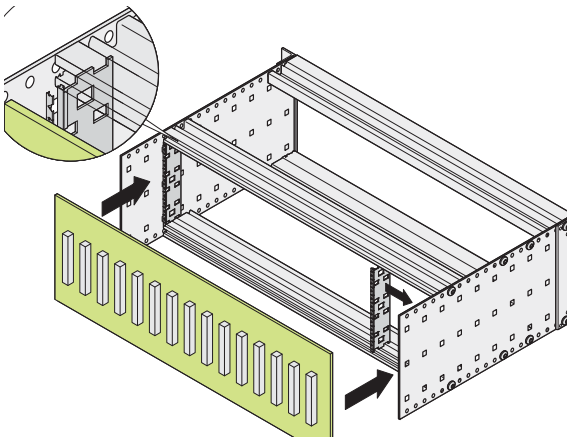	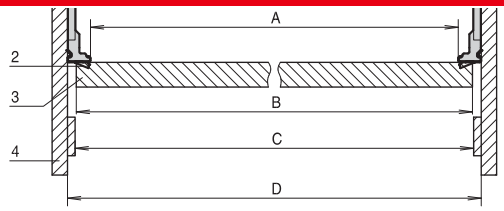 2 x support profile, Al extrusion, 2 x EMC gasket (stainless steel) Fixing materials kit and user manual; for vertical EMC shielding between shielded backplane and side panel; dimensions (84 HP): A = 425.8 mm, B < 429.9 mm, C = 429.8 mm, D = 431.8 mm
Height U	PU 1 kit
3	**24561-199**
6	**24561-499**

- With an appropriate design the backplane can be used as shielding rear panel; for that purpose a rear horizontal rail (type L-VT or H-VT) for depth-offset installation must be used to ensure the horizontal contact
- For vertical contact the support profile can be fixed to the europacPRO side panel (depth grid 30 mm)

Part number in bold face type: ready for despatch within 2 working days
Part number in normal type: ready for despatch within 10 working days

SPECIAL INTERIOR MOUNTING PARTS

- Combined mounting: 3 U + 3 U and 6 U, see page 6.59
- Horizontal board mounting, see page 6.60
- Mounting plates, see page 6.61
- Central locking for PCBs, see page 6.62
- Divider plates, see page 6.62
- Air baffles, see page 6.63
- Telescopic slides, see page 6.64
- Fixing parts (bolts, nuts, assembly tools), see page 6.63

Subracks – EuropacPRO

COMBINED MOUNTING (6 U AND 2 X 3 U ONE ABOVE THE OTHER)

ORDER INFORMATION

	Combined mounting: horizontal and vertical subdivision (incl. front panel for stainless steel EMC gasket)	Alternative front panels for combined mounting		Splitting extrusion for combined mounting item 2
		unshielded front panel, 6 U, 2 HP item 6	front panel for textile EMC gasket, 6 U, 2 HP item 6	
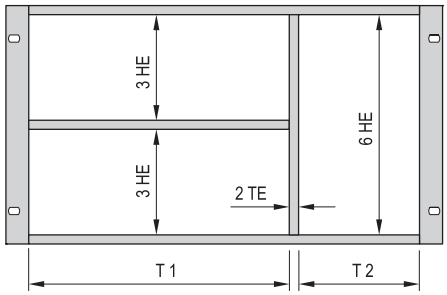	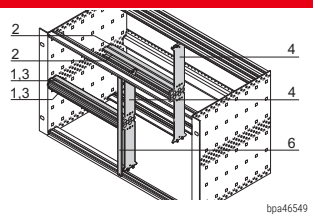 Item 1: 2 front horizontal rails (H-KD), Al extrusion, anodised; item 2: 2 rear horizontal rails (AB), Al extrusion, anodised; item 3: threaded inserts, St, zinc-plated; item 4: Zn die-cast support members; item 6: front panel 2 HP, 6 U, with EMC stainless steel gasket; 84:0 without items 4, 5 - Note see below 2)	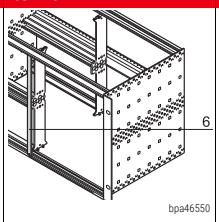 Al, 2.5 mm, front anodised, rear iridescent green chromated	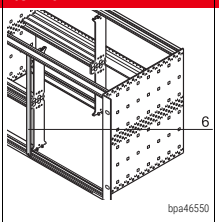 Al, 2.5 mm, U-profile with notch, 6 U, 2 HP	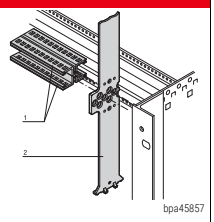 6 U, die-cast zinc; splitting extrusion is inserted in the grid holes of the horizontal rail; the splitting extrusion can be bolted
Width pitch T1:T2 HP	PU 1 kit	1 (SPQ 5)	1 piece (SPQ 5)[1)]	1 piece
20:62	**24562-420**	**30847-472**	**30849-140**	**64560-010**
40:42	**24562-440**			
42:40	**24562-442**			
63:19	**24562-463**			
84:0	**24562-484**			
Torx countersunk screw M4 × 14, zinc-plated, PU 100 pieces to fixsplitting extrusion/horizontal rail	–	–	–	**24560-145**
Panhead screw M2.5 × 10, St, zinc-plated, PU 100 pieces to fix horizontal rail/splitting extrusion	–	–	–	**24560-179**
Pozidrive/slotted collar screw M2.5 x 12.3, St, nickel-plated, PU 100 pieces	–	**21101-101**	**21101-101**	–
Pozidrive/slotted collar screw M2.5, black, zinc-plated, PU 100 pieces	–	**21101-102**	**21101-102**	–
Washer 2.7 x 5 x 1, PA 6, PU 100 pieces	–	**21101-121**	**21101-121**	–
Textile gasket, core: foam, sleeve: textile cladding with CuNi coating, UL 94 V-0 PU 10 pieces	–	–	**21101-855**	–

2) The following guide rails cannot be used: type "accessory", type "accessory, strengthened" and type "for 4.4" PCB"

- Subdivision of the 6 U assembly area into:
  - 2 x 3 U
  - 1 x 6 U
- Designed to accomodate euroboards (100 mm high) and double euroboards (233.35 mm high)

NOTE

- Please order EMC gasketing kit for horizontal rails separately, see page 6.56
- Please order perforated strips for horizontal rails separately, see page 6.35
- Please order rear centre horizontal rail separately, see page 6.33

Subracks – EuropacPRO

HORIZONTAL BOARD MOUNTING IN 3 OR 4 U SUBRACK

ORDER INFORMATION

			Horizontal board mounting in 3 or 4 U subrack		
			Board cage	Front frame for EMC shielding	Front frame, unshielded
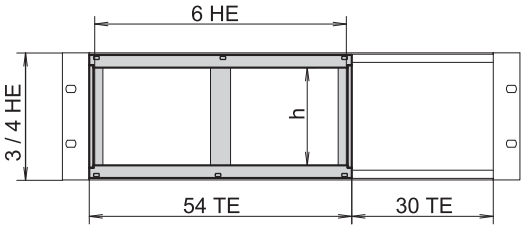 (1 TE = 1 HP, 1 HE = 1 U) bpa45914			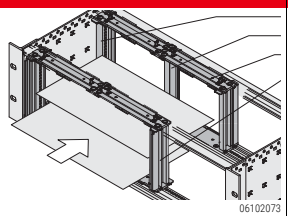 06102073 Struts, die-cast zinc; horizontal rails front and rear; threaded inserts, St, zinc-plated; fixing material kit; for horizontal mounting of double-height euroboards in 3 or 4 U high subracks/cases; 54 HP space required; **please order front frame for EMC shielding separately**	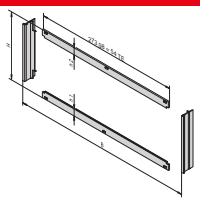 bpa45913 2 horizontal covers, Al 2.5 mm, front anodised, rear iridescent green chromated; 2 vertical trims, Al extrusion, passivated; stainless steel EMC gasket; front frame provides the contact between subrack and the sub-assemblies	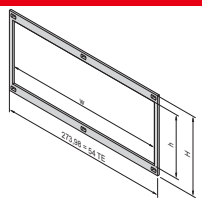 bza43061 Al, 2.5 mm, clear anodised; front frame with cut-out, clear internal width w = 266.35 mm
Height U	Usable height h HP	Mounting variants Horizontal rail, front / Horizontal rail, rear	PU 1 kit	PU 1 kit	1 piece
3	20		**24564-117**	**24564-109**	34564-108
3	20		**24564-118**	**24564-109**	34564-109
4	28		**24564-217**	**24564-209**	**34564-208**
Assembly tool, for stainless steel EMC gasket		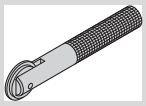	–	**24560-270**	–

* For direct backplane mounting

NOTE

- Please order front frame for EMC shielding separately

Subracks – EuropacPRO

MOUNTING PLATES

ORDER INFORMATION

			Mounting plate can be used in combination with cover plate	Mounting plate for use without cover plate	Fixing strip for partial widths
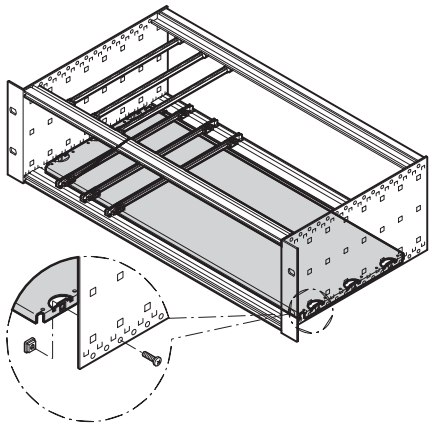 bpa45875			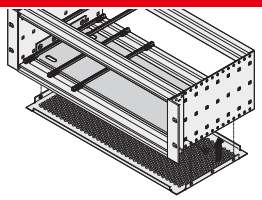 06108080 Al, 1.5 mm; mounting is only possible over the entire width between the side panels; width of mounting plate = W - 9.71 mm	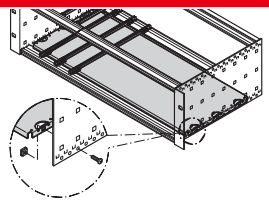 bpa45875 Al, 1.5 mm; for mounting over partial width, please order fixing strips separately	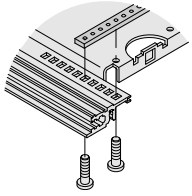 bpa46557 St, 2.5 mm, zinc-plated; is bolted from front to rear onto the horizontal rails; to fix mounting plates
Width W HP	W mm	Board length mm	1 piece	1 piece	1 piece
28	146.88	160	34563-001	**34562-745**	**30840-021**
28	146.88	220	**34563-009**	**34562-749**	**30840-033**
28	146.88	280	–	**34562-753**	**30840-045**
28	146.88	340	–	**34562-757**	**30840-057**
42	217.99	160	**34563-002**	**34562-746**	**30840-021**
42	217.99	220	**34563-014**	**34562-750**	**30840-033**
42	217.99	280	–	**34562-754**	**30840-045**
42	217.99	340	–	**34562-758**	**30840-057**
63	324.67	160	**34563-003**	**34562-747**	**30840-021**
63	324.67	220	**34563-019**	**34562-751**	**30840-033**
63	324.67	280	–	**34562-755**	**30840-045**
63	324.67	340	–	**34562-759**	**30840-057**
84	431.35	160	**34563-004**	**34562-748**	**30840-021**
84	431.35	220	**34563-024**	**34562-752**	**30840-033**
84	431.35	280	–	**34562-756**	**30840-045**
84	431.35	340	–	**34562-760**	**30840-057**
Assembly kit for mounting plate, PU 1 kit (Torx countersunk screw M4 x 5, St, zinc-plated, 12 pieces; screw M4 x 6, St, zinc-plated, 10 pieces; square nut M4, St, zinc-plated, 10 pieces)			**24560-184**	**24560-184**	–
Assembly kit for fixing strips for partial width mounting plates Torx screw M2.5 x 5, St, zinc-plated, PU 100 pieces			–	–	**24560-146**

NOTE

- For installation and fixing of heavy components
- In addition to the mounting plate, (EMC) cover plates can also be fitted to the subrack
- The mounting plate is as wide as the subrack or system case and is fixed to the side panels
- A guide rail can be fitted on the first and last slot
- Guide rails type "4.4" and type "strengthened" cannot be used

Part number in bold face type: ready for despatch within 2 working days
Part number in normal type: ready for despatch within 10 working days

CENTRAL LOCKING

ORDER INFORMATION

		Central locking for PCBs without front panels
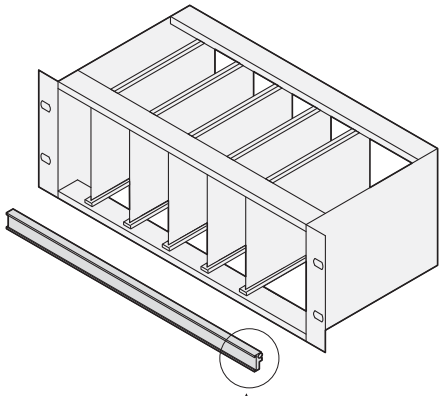 06197010		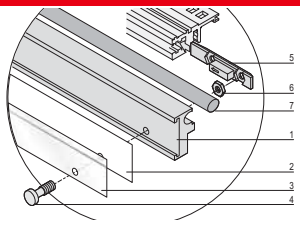 bza45819 Item 1: central rail, Al, anodised; item 2: ID cardboard, white; item 3: transparent cover strip, plastic; item 4: 2 x knurled screw; item 5: 2 x slide nut; item 6: 2 x hexagon nut M2.5; item 7: rubber gasket; central locking allows joint locking of PCBs and serves as identification strip; can be fitted to front and rear horizontal rails, suitable for 84 HP width
Width HP	Length mm	1 piece
84	426.0	**24560-167**

DIVIDER PLATE

ORDER INFORMATION

					Divider plate	
					Mounting position when stainless steel EMC gasket is used	Mounting position when textile EMC gasket is used
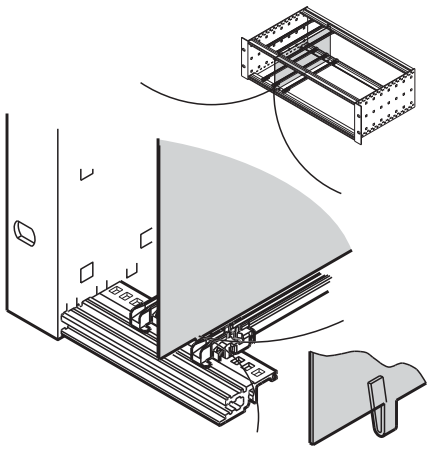 bpa45912					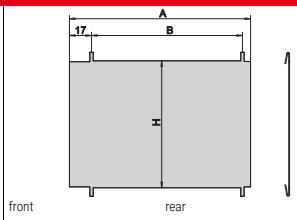 bpa45911	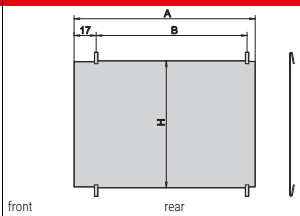 06105078
					Stainless steel, 1 mm, is mounted by clipping onto horizontal rail, space requirement on component side 2 mm; mounting direction varies with shielding design (EMC stainless steel or textile gasket); retrofitting the divider plate in an already-assembled subrack/case will first require dismantling of the horizontal rails; where front panels are unshielded, both mounting directions are possible	
Height U	Depth mm	A mm	B mm	H mm	PU 10 pieces	
3	160	158.3	135.0	113.5	**34562-761**	
3	220	218.3	195.0	113.5	**34562-762**	
6	160	158.3	135.0	246.9	**34562-763**	
6	220	218.3	195.0	246.9	**34562-764**	

Subracks – EuropacPRO

AIR BAFFLES FOR SLOTS

ORDER INFORMATION

			Air baffle without front panel	Air baffle with front panel	
				Front panel with lateral groove for stainless steel EMC gasket	U front panel for textile EMC gasket
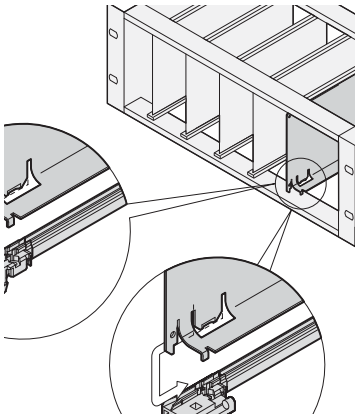 06101507			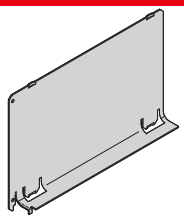 06108085 Al, 1 mm, incl. fixing material kit; prevents an air short circuit in unused slot positions; is pushed into the groove of the guide rail	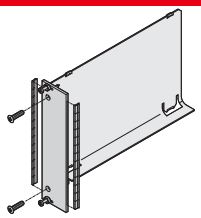 06108087 Air baffle, Al, 1 mm; front panel, Al, 2.5 mm, front anodised, rear conductive; stainless steel EMC gasket; fixing material kit prevents an air short circuit in unused slot positions; is pushed into the groove of the guide rail	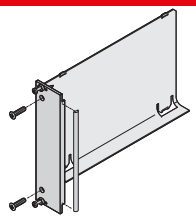 06108088 Air baffle, Al, 1 mm, front panel, Al extrusion, 2.5 mm, front anodised, rear conductive; textile EMC gasket, fixing material kit prevents an air short circuit in unused slot positions; is pushed into the groove ofthe guide rail
Depth mm	Width HP	Height U	1 piece	1 piece	1 piece
160	4	3	**34562-823**	**20848-712**	**20848-728**
160	4	6	**34562-826**	**20848-720**	**20848-736**
160	8	3	**34562-833**	20848-714	20848-730
160	8	6	**34562-836**	20848-722	20848-738
160	12	3	**34562-843**	20848-716	20848-732
160	12	6	**34562-846**	20848-724	20848-740
220	4	3	**34562-824**	20848-713	20848-729
220	4	6	34562-827	20848-721	20848-737
220	8	3	34562-834	20848-715	20848-731
220	8	6	34562-837	20848-723	20848-739
220	12	3	34562-844	20848-717	20848-733
220	12	6	34562-847	20848-725	20848-741
Assembly tool for stainless steel EMC gasket, 1 piece 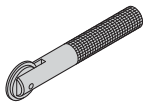			–	**24560-270**	–

NOTE

- Air baffle for 280 mm deep and for 80 mm rear I/O boards available on request

Subracks – EuropacPRO

SIMPLE TELESCOPIC SLIDE FOR ASSEMBLY OF SUBRACKS IN CABINETS

06101006

- For mounting 84 HP wide subracks in the 19" plane
- Loading capacity: 25 kg per pair
- The guiding profile is matched to the fixing dimension in the cabinet (it is bolted to the 19" profile of the cabinet); the adaptor rail is matched to the depth and fixing dimension on the subrack (it is inserted into the guiding profile like a telescopic slide)
- Safety note:
  No protection against extraction, no stop at full extension

Order Information

Telescopic slides with guiding profile for fitting in cabinets

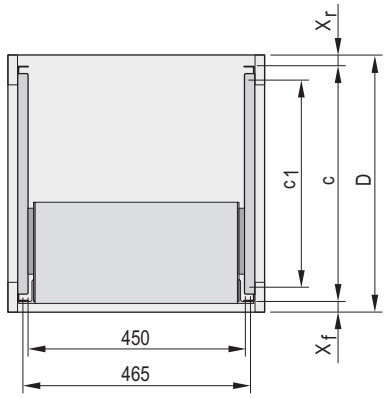

06108082

Description	Depth D mm	xf mm	xr mm	C mm	c1 mm	Part no.
VARISTAR	600	50	50	500	369	**24562-464**
VARISTAR	800	50	50	700	569	**24562-466**
VARISTAR	900	50	50	800	669	**24562-467**
VARISTAR	1000	50	50	900	769	**24562-468**
VARISTAR	1100	50	50	1000	869	**24562-472**
VARISTAR	1200	50	50	1100	969	**24562-473**
eurorack	600	60	60	480	397	**24562-449**
eurorack	800	60	60	680	597	**24562-451**
eurorack	900	60	60	780	697	**24562-452**
NOVASTAR	500	33	60	407	350	**24562-460**
NOVASTAR	600	33	60	507	450	**24562-461**
NOVASTAR	800	33	60	707	650	**24562-474**
Lab rack	250	0	0	250	162	**24562-446**

x_f, x_r: Distance of 19" plane to cabinet edge (front, rear)
c: Distance of 19" planes from each other,
c1: Fixing dimension of guiding profile on 19" panel/slide mounts

Order Information

Telescopic slides with adaptor rail for subracks

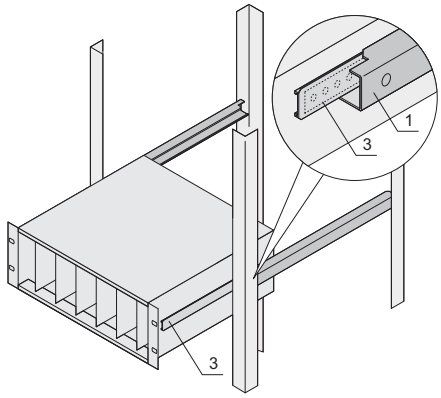

06108072

For subrack depth mm	Part no.
175	**24562-453**
235	**24562-454**
295	**24562-455**
355	**24562-456**
415	**24562-457**
475	**24562-458**

Subracks – EuropacPRO

ASSEMBLY PARTS

- Quick-release fasteners
- Sleeves
- Screws
- Cage nuts
- Tools

QUICK-RELEASE FASTENERS

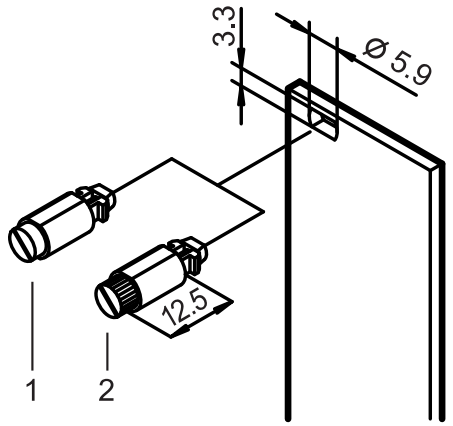

06702062

- Vibration and shock proof
- 1/4 rotary lock with defined stop
- Detection of locking position through slot position

DELIVERY COMPRISES

Qty	Description
1	Locking pin, St, locking, Zn die-cast
1	Press-in sleeve, POM

ORDER INFORMATION

Item	Description	Qty/PU	Part no.
1	With slotted head, grey	100	**21101-847**
1	With slotted head, black	100	**21101-848**
2	With knurled and slotted head, grey	100	**21101-849**
2	With knurled and slotted head, black	100	**21101-850**

NOTE

Quick-release fasteners: mounting without threaded inserts

SLEEVES

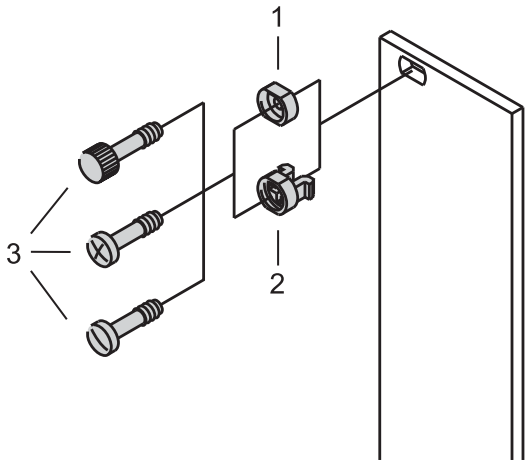

06702061

ORDER INFORMATION

Item	Description	Qty/PU	Part no.
2	Plastic sleeve, PA, grey	100	**21100-464**
2	Plastic sleeve, PA, black	100	**21100-591**
1	Metal sleeve, brass, nickel-plated	10	**21100-659**
1	Metal sleeve, brass, nickel-plated	100	**21100-660**
1	Metal sleeve, brass, black	100	**21100-886**
1	Metal sleeve, stainless steel	10	**21100-661**
1	Metal sleeve, stainless steel	100	**21100-662**

NOTE

- Metal sleeves must be pressed-in in front panels
- Sleeve does not fit in 2 HP wide front panels

COLLAR SCREWS

ORDER INFORMATION

	Description	Application	Material	Dimension	Qty/PU	Part no.
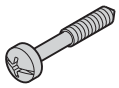 AZA46586	Collar screw with pozidrive/slot	For mounting of front panels when using threaded inserts	St, nickel-plated	M2.5 x 12.3	100	**21101-101**
			St, zinc-plated, black	M2.5 x 12.3	100	**21101-102**
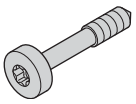 AZA45941	Torx collar screw	For mounting of front panels when using threaded inserts	St, nickel-plated	M2.5 x 12.3	100	**21101-782**
			St, zinc-plated, black	M2.5 x 12.3	100	**21101-783**
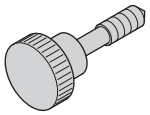 aza45929	Collar screw with knurled head	For mounting of front panels when using threaded inserts	Brass, nickel-plated	M2.5 x 12.3	100	**21101-749**
		For mounting of front panels when using threaded inserts for horizontal rails with long lip	Brass, nickel-plated	M2.5 x 12.3	100	**21101-909**

TORX SCREWS, SELF-FORMING

ORDER INFORMATION

	Description	Application	Material	Dimension	Qty/PU	Part no.
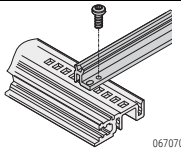 06707058	Torx panhead screw, self-forming	For extra-robust Al guide rails; torque max. 0.2 Nm	St, zinc flake coating, black	2.5 x 7.3	100	**24560-157**
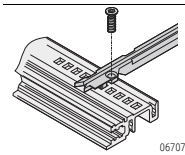 06707058	Torx countersunk screw, self-forming	For 4.4" board height, guide rail on horizontal rail, europacPRO, ratiopacPRO; torque max. 0.2 Nm	St, zinc-plated	2.5 x 7.7	100	**24560-158**
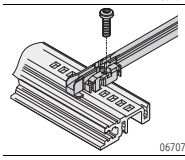 06707058	Torx panhead screw, self-forming	For plastic guide rail on horizontal rail; for panel bracket on horizontal rail; torque max. 0.2 Nm	St, zinc-plated	2.5 x 9.3	100	**24560-141**
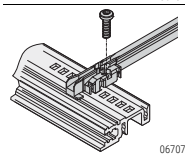 06707058	Torx panhead screw, self-locking	For plastic guide rails on horizontal rails	St, zinc-plated	2.5 × 9.3	100	**21500-039**
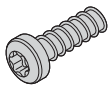 06707058	Torx panhead screw	For 6 U support member, backplane mounting, centre horizontal rail	St, zinc-plated	2.5 × 10	100	**24560-179**

Subracks – EuropacPRO

COUNTERSUNK SCREWS

ORDER INFORMATION

	Description	Application	Material	Dimension	Qty/PU	Part no.
AZA46585	Torx screw	For support profiles europacPRO, ratiopacPRO	St, zinc-plated	M4 x 5	100	**24560-139**
		For mixed board assembly and assembly of shortened horizontal rail on support member, with GND/earthing function	St, zinc-plated	M4 x 14	100	**24560-145**

TORX PANHEAD SCREWS

ORDER INFORMATION

	Description	Application	Material	Dimension	Qty/PU	Part no.
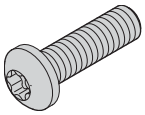 aza45940	Torx panhead screw	For Z-rails and connector assembly	St, nickel-plated	M2.5 x 7	100	**24560-147**
		For perforated rails	St, nickel-plated	M2.5 x 10	100	**24560-148**
		For backplane mounting	St, nickel-plated	M2.5 x 12	100	**24560-161**
			St, nickel-plated	M2.5 x 14	100	**24560-162**
aza45178	Washer	For insulated backplane mounting	Plastic, PA	2.8 x 6.3 x 2	100	**21101-964**
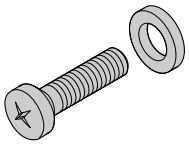 aza45940	Screw + plastic washer (PA)	For backplane mounting	St, nickel-plated	M2.5 x 12	100	**21100-777**
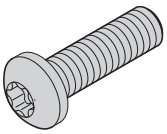 aza45940	Torx panhead screw	To bolt on support bracket, rear hood, corner profile on side panel, lengthening bracket and connecting bracket	St, zinc-plated	M4 x 6	100	**24560-135**
		To bolt-on cover plate or mounting plate, with GND/earthing function	St, zinc-plated	M4 x 6	100	**24560-151**
		To bolt-on cover plate or mounting plate, with GND/earthing function, self-forming thread	St, zinc-plated	M4 x 6	100	**21101-884**
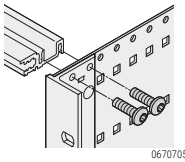 06707058		For horizontal rail on side panel if guide rails are bolted to slot 1	St, zinc-plated	M4 x 10	100	**24560-155**
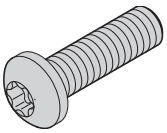 aza45940		For horizontal rail on side panel, with GND/earthing function	St, zinc-plated	M4 x 14	10	**24560-131**
		For horizontal rail on side panel, with GND/earthing function	St, zinc-plated	M4 x 14	100	**24560-130**

Part number in bold face type: ready for despatch within 2 working days
Part number in normal type: ready for despatch within 10 working days

GRUB SCREWS

ORDER INFORMATION

	Description	Application	Material	Dimension	Qty/PU	Part no.
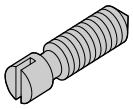 06702053	Grub screw	For threaded inserts M2.5 and perforated strips	Stainless steel	M2.5 x 9	100	**21101-359**
		For threaded inserts M2.5	St, nickel-plated	M2.5 x 8	100	**21100-276**
		For threaded inserts M3	St, zinc-plated	M3.0 x 8	100	**21100-646**

SQUARE NUTS

ORDER INFORMATION

	Description	Application	Material	Dimension	Qty/PU	Part no.
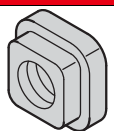 AZA45921	Square nut	For fixing: parts to side panels, support profiles, mounting plates	St, zinc-plated	M4	100	**24560-140**

ASSEMBLY KITS

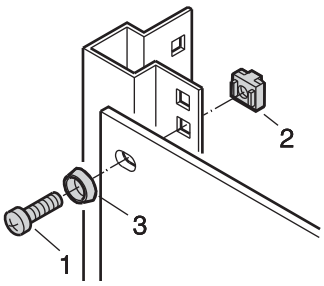

SC128XXX

- For assembly of subracks in cabinets or 19" cases
- For assembly of desk-top cases in cabinets by means of 19" brackets

DELIVERY COMPRISES (kit)

Item	Qty	Description
1	1	Pozidrive screw M6 × 16, zinc-plated
2	1	Plastic washer, ABS, black
3	1	Cage nut M6, zinc-plated

ORDER INFORMATION

Description	Part no.
PU = 8 × screw, washer, nut	**21100-435**
PU = 50 each of M6 screw, washer and cage nut	**21101-809**
PU = 100 each of M6 screw, washer and cage nut	**21101-810**

- For 19" brackets with material thickness of 1.5 mm, see "Assembly kits" in chapter Cabinet accessories

Subracks – EuropacPRO

SLIDE, TO ACCOMODATE 2 NUTS

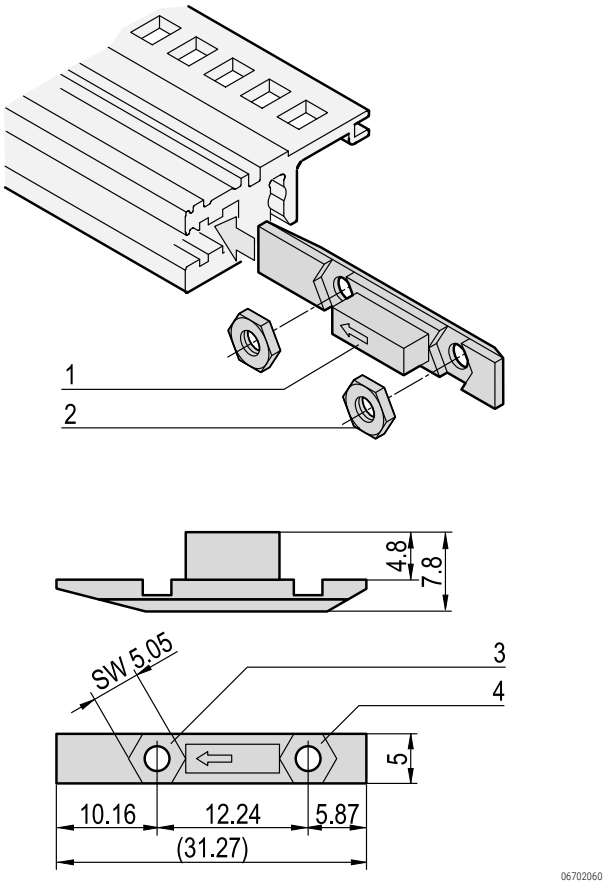

- The slide is pushed into the groove of the horizontal rail to front or rear (type VT)

DELIVERY COMPRISES (kit)

Item	Qty	Description
1	1	Slide, PBT, red, UL 94 V-0
2	2	Nut, M2.5, St, zinc-plated

ORDER INFORMATION

Description		Part no.
Slide nut kit 1	100 slides/200 nuts	**24560-165**
Slide nut kit 2	12 slides/24 nuts	**24560-166**

NOTE

- Nuts used in item 3 suitable for:
  - hinged front panels, 84 HP
  - front or rear panels, 84 HP
- Nuts used in item 4 suitable for:
  - hinged front panels
- Nuts used in item 3 and 4 suitable for:
  - two front panels

ASSEMBLY TOOLS

ORDER INFORMATION

	Description	Application	Dimension	Qty/PU	Part no.
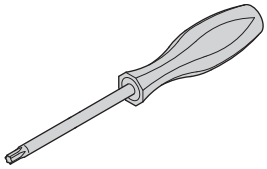 AZA45925	Torx screwdriver	T 8 torx	T8	1	**64560-026**
		T 20 torx	T20	1	**64560-027**
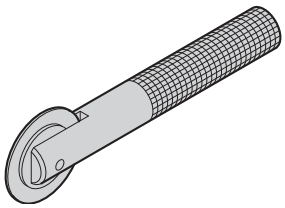 aza45938	Assembly tool	Exclusively to fix stainless steel EMC gaskets in horizontal rails	–	1	**24560-271**
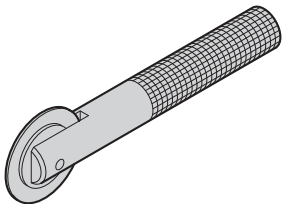 aza45937	Assembly tool	To fix stainless steel EMC gaskets on front panels with lateral slots	–	1	**24560-270**

NOTE

- Assembly tool to insert keying/coding pegs in guide rails is available on request

TAPE MEASURE

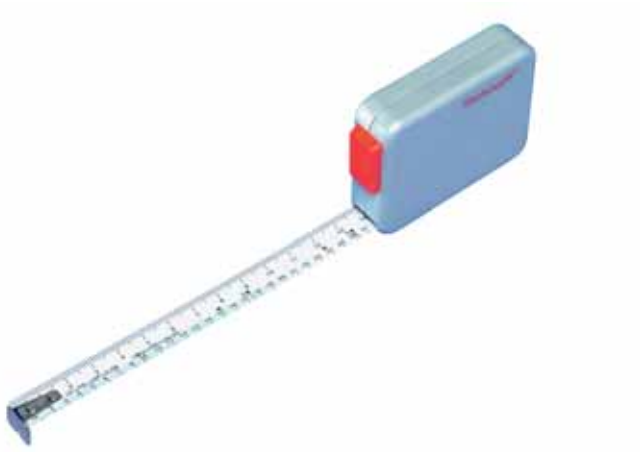

32506001

- Measuring tape with cm, U-, HP-division (length 2 m)
- Plastic housing, metal measuring tape with automatic collection

ORDER INFORMATION

Description	Qty/PU piece	Part no.
Tape measure	1	**89009-001**

Subracks – EuropacPRO

APPLICATION EXAMPLES

Application: Transportation/defense sectors

06108006

- Mounting frame to accomodate a 36 HP wide railway subrack, frame from stainless steel

06103001

- Robust assembly by double bolt-on fixing
- Lateral ducting in cabinet
- Combined mounting 6 U+ 2 x 3 U

Application: Measurement, control and instrumentation sectors

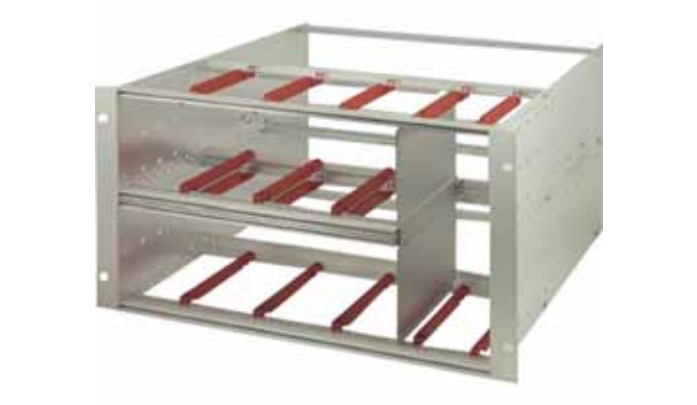

06108002

- Combined mounting with 2 x 3 U in 6 U
- Divider plate to separate different sections
- Installation with strengthened guide rails

06108003

- Subrack with additional telescopic fan unit
- Adaptation at bottom and top integrated into the side panel

Application: Telecoms sectors

06112023

- Shielded subrack for special applications with mounting plate, cover and base plate
- Mounting plate for heavy assemblies

06101005

- Subrack with plastic cable ducting for fibre optic cables
- Terminal area at top

Part number in bold face type: ready for despatch within 2 working days
Part number in normal type: ready for despatch within 10 working days

Subracks – EuropacPRO

PLATFORM-BASED STANDARD SOLUTIONS FOR INDIVIDUAL REQUIREMENTS

Practical technology without time-consuming assembly. The modular europacPRO product platform allows a wide range of possible applications with only a few components. The intelligent design of all components results in remarkably simple and fast management in assembly and components.

Two ways of reaching your desired product:

- Kits
- Individual configuration

Simple assembly with europacPRO kits:

06107001

Delivered in space-saving flat packs. The threaded inserts or EMC gasket (depending on selected kit) are already pre-mounted on the horizontal rail.

Individual configuration:

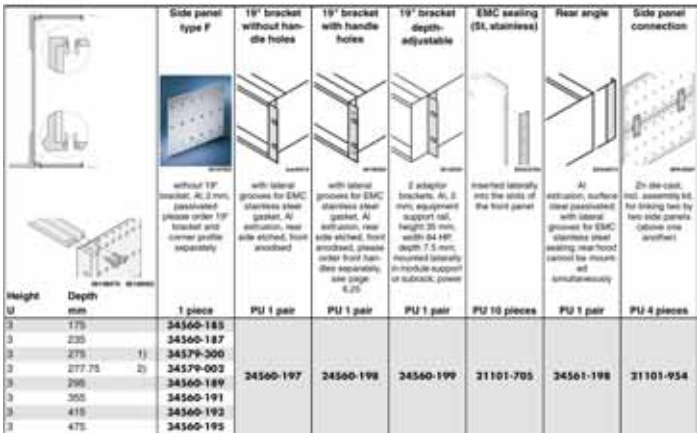

Height U	Depth mm		Side panel type F	19" bracket without handle holes	19" bracket with handle holes	19" bracket depth-adjustable	EMC sealing (St, stainless)	Rear angle	Side panel connection
			without 19" bracket, Al, 2 mm, passivated, please order 19" bracket and corner profile separately	with lateral grooves for EMC stainless steel gasket, Al extrusion, rear side etched, front anodized	with lateral grooves for EMC stainless steel gasket, Al extrusion, rear side etched, front anodized, please order front handles separately, see page 6.25	2 adaptor brackets, Al, 3 mm, equipment support rail, height 35 mm, width 84 HP, depth 7.5 mm, mounted laterally in module support or subrack, power	inserted laterally into the slots of the front panel	Al extrusion, surface steel passivated, with lateral grooves for EMC stainless steel sealing, rear hood carried be mounted simultaneously	Zn die-cast, incl. assembly kit, for linking two by two side panels (above one another)
			1 piece	PU 1 pair	PU 1 pair	PU 1 pair	PU 10 pieces	PU 1 pair	PU 4 pieces
3	175		34560-185						
3	235		34560-187						
3	275	1)	34579-300						
3	277.75	2)	34579-002	34560-197	34560-198	34560-199	31101-705	34561-198	31101-954
3	295		34560-189						
3	355		34560-191						
3	415		34560-192						
3	475		34560-195						

06109052

You design your subrack as you wish, then receive it fully assembled via our **ServicePLUS assembly service** (even for orders of just one). We can also carry out individual modifications and cut-outs; and when time is short can do so very fast via ServicePLUS express.

HORIZONTAL RAILS AND SIDE PANELS FOR DIFFERENT LOAD-CARRYING CLASSES

06197007

Light

06197008

Heavy

06112004

Rugged

Horizontal rails are available for three load classes:

- "light" (load up to approx. 7.5 kg)
- "heavy" (load > 7.5 kg)
- "rugged" (load 15 kg)

06197002

Type Light

06197003

Type Flexible

06197004

Type Heavy

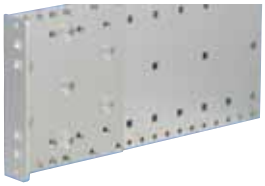

06112021

Type Rugged

Side panels for 4 different load classes

- Light: low-cost version with built-in 19" mounting bracket
- Flexible: with separate, depth-adjustable 19" mounting bracket
- Heavy: with integrated, tox-cold welded 19" mounting bracket, e.g. for shock and vibration environments up to 5 g
- Rugged: with integrated, tox-cold welded 19" mounting bracket and higher material thicknesses for extreme mechanical stresses, e.g. for increased shock and vibration environments up to 25 g
- The combination of the 3 horizontal rail variants with the 4 types of side panel results in an almost unlimited variety of potential applications for various market requirements

Subracks – EuropacPRO

GUIDE RAILS FROM PLASTIC AND ALUMINIUM PROFILES

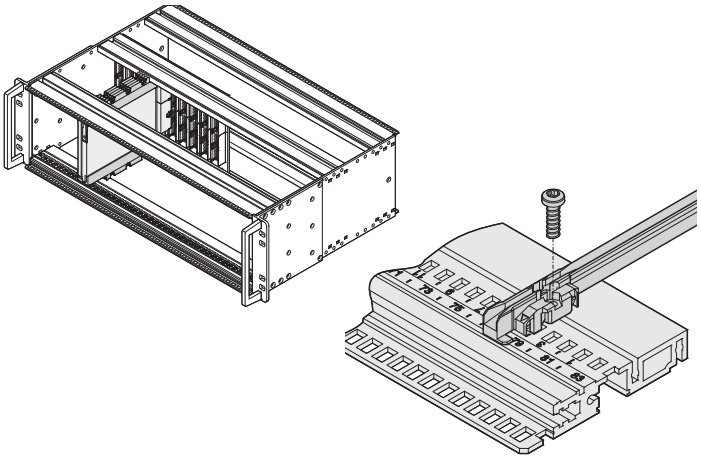

06112052 06111059

Guide rails form the interface between the subrack mechanics and the assemblies (boards, plug-in units, frame type plug-in units, drive unit modules, ...).

Robust snap-in fixings on the plastic rails assure a secure grip, even when exposed to vibrations. In the case of H and R-type horizontal rails the guide rails can also be bolted on. For extreme stresses, guide rails in aluminium extrusion are used.

To ensure that the wrong subassembly is not inserted into the wrong space we offer a mechanical coding to IEEE 1101.10/11 and IEC 60297-3-103.

The continuous numbering on the horizontal rail (from 28 HP) and the markings on the guide rails facilitate quick fitting in the correct position.

We offer the appropriate adaptors for accommodating VPX or CompactPCI boards with strengthening frame or conduction-cooled assemblies (CCA) installed in a subrack.

ELECTROMAGNETIC SHIELDING AND ESD

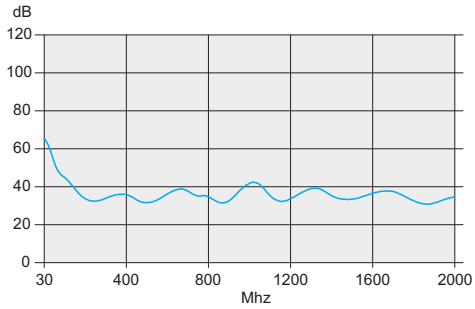

06108081

The product platform europacPRO offers a variety of off-the-shelf solutions to assure electromagnetic compatibility (EMC) and to avoid electrostatic discharge (ESD).

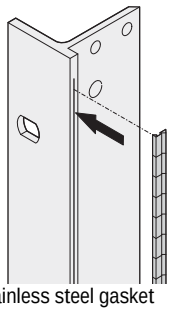

Stainless steel gasket

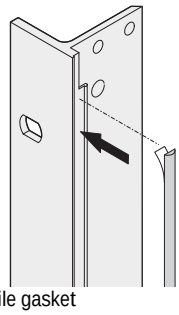

Textile gasket

06108074 06108073

Two shielding concepts
It can't be more secure!

Two types of shielding concepts to front/rear of the subrack allow the use all Schroff frontpanels.

The shielding at the front of the subrack is by means of stainless steel or textile EMC gaskets.

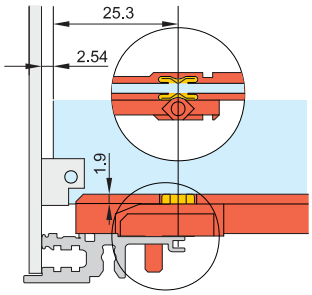

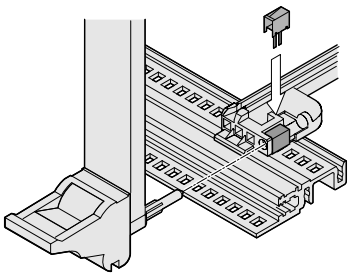

04503050 06103052

ESD (electrostatic discharge)
To avoid electrostatic discharge when inserting PCBs, ESD contacts are clipped into the guide rails. These establish a conductive connection between PCB and subrack-earth. Under IEC 60297-3-101 two ESD areas are defined on the euroboard. The ESD clips of the guide rail of the europacPRO subrack allow the assembly of both following variants:

- ESD area (bottom and top) over the complete board length
- ESD area (bottom/top) begins at the front from 70 mm to end of board)

North America

Warwick, RI, USA
Tel +1.800.525.4682
San Diego, CA, USA
Tel +1.800.854.7086

Europe, Middle East & India

Straubenhardt, Germany
Tel +49 7082 794 0
Betschdorf, France
Tel +33 3 88 90 64 90
Warsaw, Poland
Tel +48 22 209 98 35
Hemel Hempstead, Great Britain
Tel +44 1442 24 04 71
Lainate, Italy
Tel +39 02 932 714 1
Dubai, United Arab Emirates
Tel +971 4 37 81 700
Bangalore, India
Tel +91 80 67152000
Istanbul, Turkey
Tel +90 216 250 7374

Asia Pacific

Shanghai, China
Tel +86 21 2412 6943
Singapore
Tel +65 6768 5800
Shin-Yokohama, Japan
Tel +81 45 476 0271

Our powerful portfolio of brands:

CADDY ERICO HOFFMAN RAYCHEM SCHROFF TRACER

nVent

nVent.com/SCHROFF

©2018 nVent. All nVent marks and logos are owned or licensed by nVent Services GmbH or its affiliates. All other trademarks are the property of their respective owners.
nVent reserves the right to change specifications without notice.